REV	DESCRIPTION	DRAWN / APPROVED	DATE
A	REDESIGNED-ITEM 1 WAS MC-493064 ITEMS 9,10, & 11 ADDED W/CORESPONDING DIMENSION WEIGHT ADDED;BOTTOM VIEW ADDED	G SMITH	09-JAN-2013
		E.VILLEGAS	01-MAR-2013
A1	ADDED WELDS IN AREAS B5 & D6 CHG'D WELD SIZES: AREA C3 WAS 1/4, AREA B3 WAS 5/16 AREA B2 WAS 10.56	D.FRIEND	01-MAR-2013
		E.VILLEGAS	01-MAR-2013

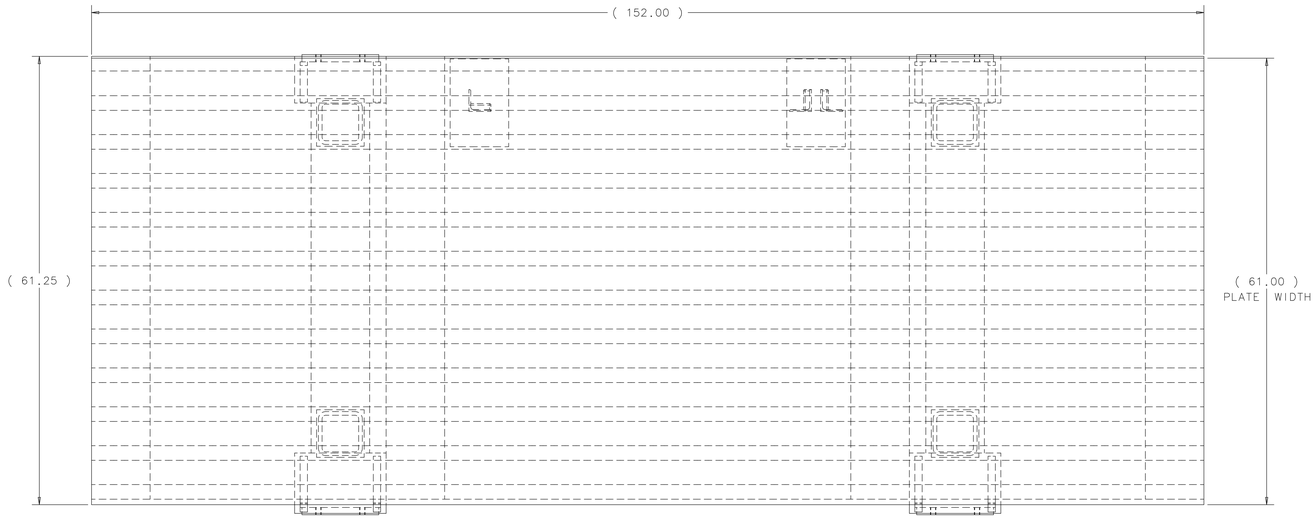

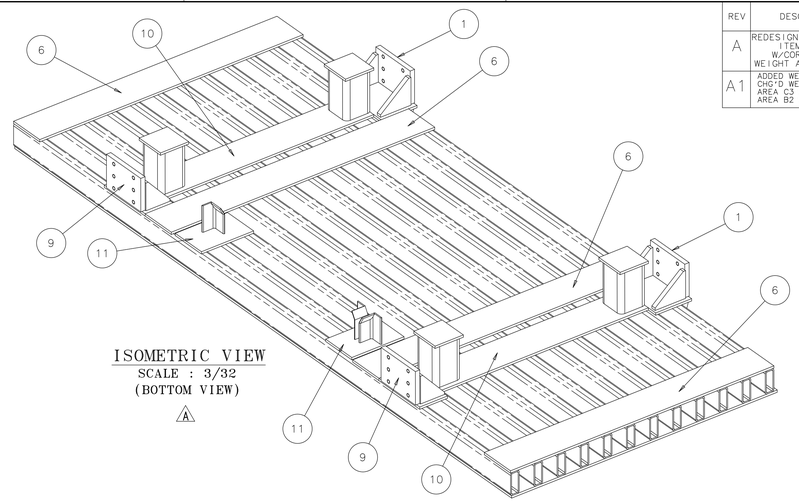

ISOMETRIC VIEW
SCALE : 3/32
(BOTTOM VIEW)
A

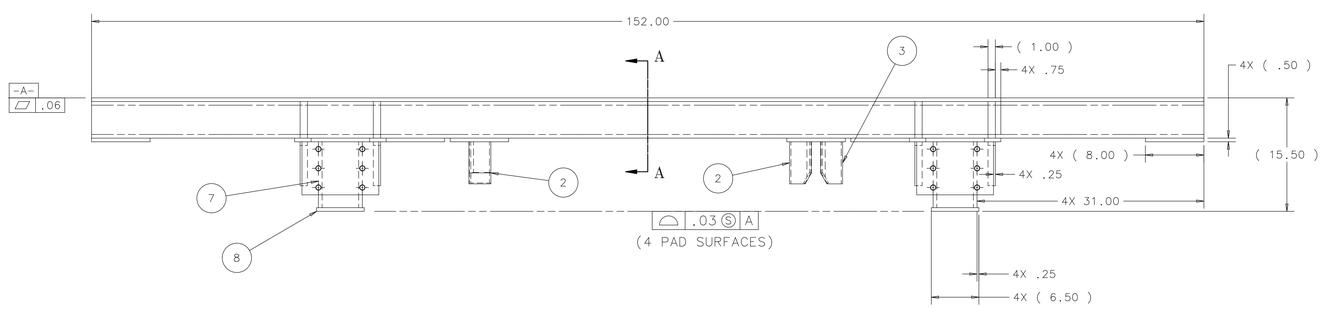

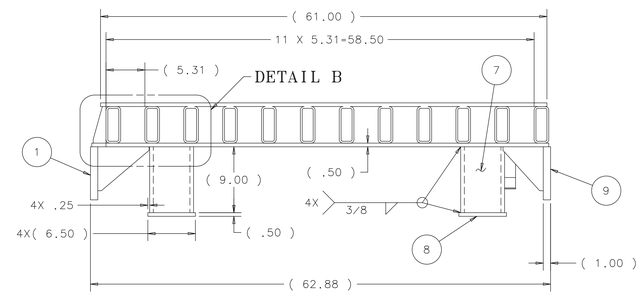

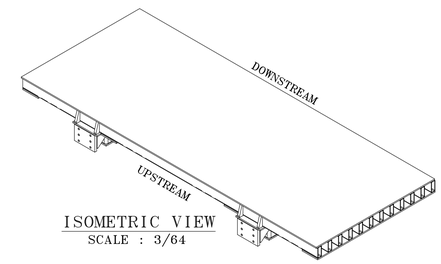

ISOMETRIC VIEW
SCALE : 3/64

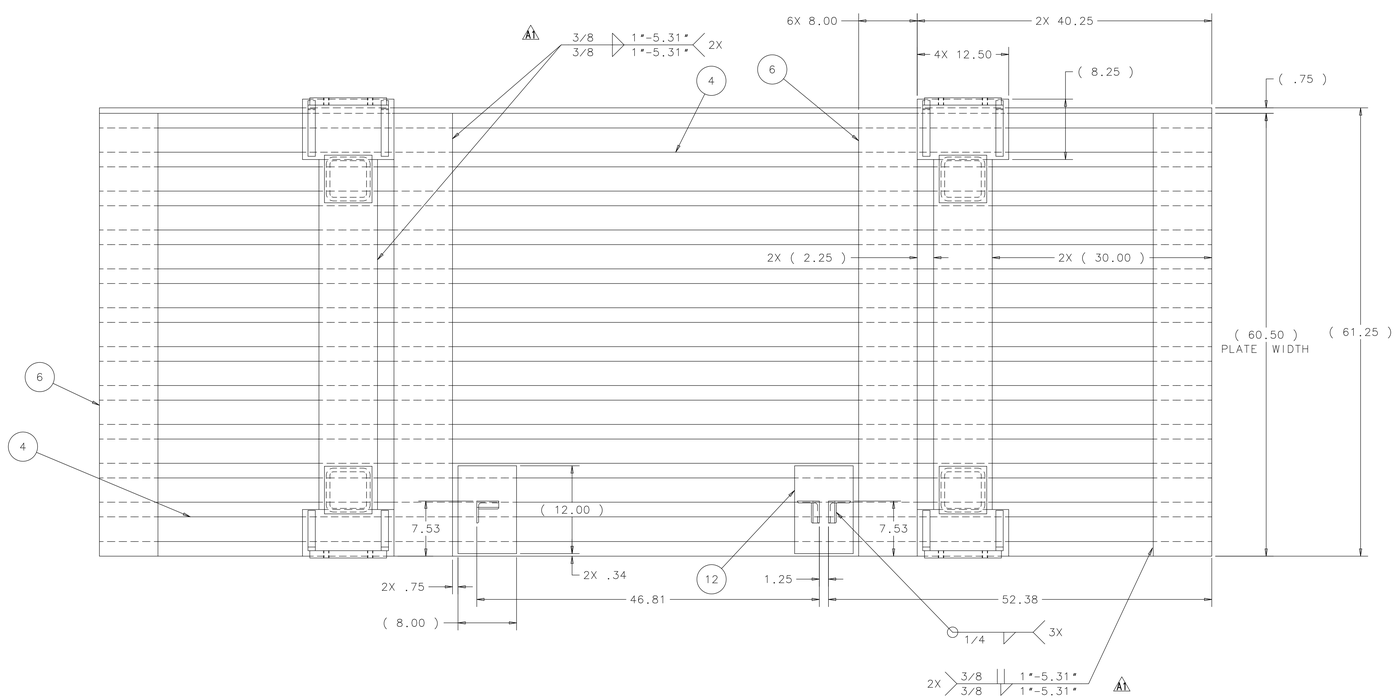

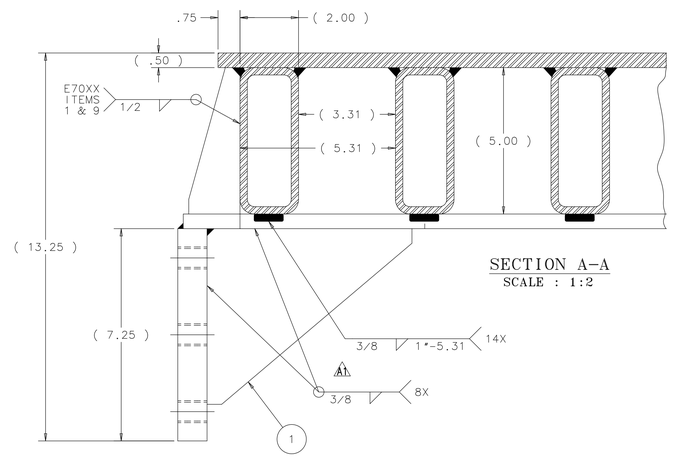

SECTION A-A
SCALE : 1:2

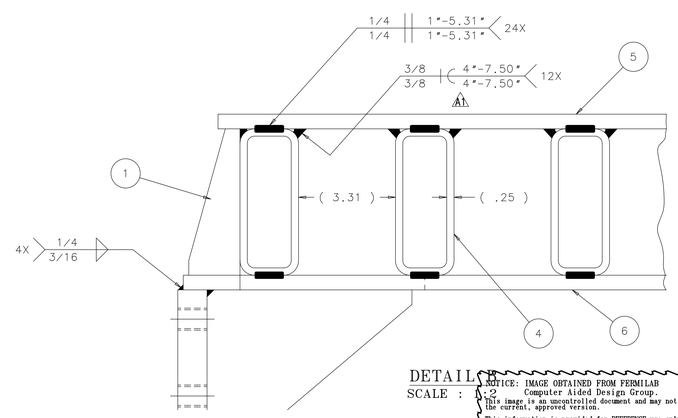

DETAIL B
SCALE : 1:2

WEIGHT = 3,650 LBS
A

ITEM	PART NO.	DESCRIPTION OR SIZE	QTY.
A 11	COML	STEEL PLATE ASTM A36 1/2 X 8 X 12.00	2
A 10	COML	STEEL PLATE ASTM A36 1/2 X 8 X 47.81	2
A 9	MD-493313	DOWNSTREAM ATTACHMENT WELDMENT	2
8	COML	STEEL PLATE ASTM A36 1/2 X 6.50 X 6.50	4
7	COML	SQUARE, STRUCT. STEEL TUBE ASTM A36 - 6x6x.50x9.00 LG.	4
6	COML	STEEL PLATE ASTM A36 1/2 X 8 X 152.00	4
5	COML	PALLET DECK-STEEL PLATE ASTM A36-1/2 X 61.00 X 152.00	1
4	COML	REC. STRUCT. STEEL TUBE ASTM A500 - 5 X 2 X .25 WALL	12
3	MB-489926	L3 X 3 X .25 RIGHT	1
2	MB-489925	L3 X 3 X .25 LEFT	2
A 1	MD-493312	UPSTREAM ATTACHMENT WELDMENT	2

PARTS LIST

UNLESS OTHERWISE SPECIFIED			ORIGINATOR	E.VILLEGAS	17-OCT-2012
.XX	.XXX	ANGLES	DRAWN	G.SMITH	17-OCT-2012
± .06	± ---	± ---	CHECKED	D.FRIEND	14-NOV-2012
			APPROVED	E.VILLEGAS	14-NOV-2012

1. BREAK ALL SHARP EDGES .015 MAX.
2. DO NOT SCALE DRAWING.
3. DIMENSIONS BASED UPON ASME Y14.5M-1994
4. MAX. ALL MACH. SURFACES 250
5. DRAWING UNITS: U.S. INCH

USED ON: ME-493039

MATERIAL: SEE PARTS LIST ABOVE

FERMI NATIONAL ACCELERATOR LABORATORY
UNITED STATES DEPARTMENT OF ENERGY

NOVA-NEAR_DETECTOR MODULES ND PALLET WELDMENT

SCALE	DRAWING NUMBER	SHEET	REV
1:8 & AS NOTED	3929.330-ME-493063	1 OF 1	A

CREATED WITH : Ideas12NXSeries GROUP: PPD/MECHANICAL DEPARTMENT

NOTICE: IMAGE OBTAINED FROM FERMILAB
Computer Aided Design Group.
This image is an uncontrolled document and may not be the current, approved version.
This information is provided for REFERENCE use only. DO NOT USE FOR DESIGN INFORMATION.
All information contained in this document represents work sponsored by an agency of the U.S. Government. Neither the U.S. Government nor any agency thereof, nor Universities Research Association, Inc., nor any of their employees or officers, makes any warranty, express or implied, or assumes any legal liability or responsibility for the accuracy, completeness, or usefulness of any information, apparatus, product or process disclosed, or represents that its use would not infringe privately owned rights.

NOTES:

1. ALL WELDS TO BE E70XX OR EQUIVALENT.
2. ALL WELDING SHALL BE IN ACCORDANCE WITH ANSI/AWS D1.1, "STRUCTURAL WELDING CODE - STEEL"
3. ALL WELDS SHALL BE MADE IN A SEQUENCE THAT WILL BALANCE THE APPLIED WELDING HEAT WHILE THE WELDING PROGRESSES. THE PROCEDURE AND SEQUENCE SHALL BE DESIGNED TO MINIMIZE DISTORTION AND SHRINKAGE STRESSES.
4. ALL WELDS SHALL BE VISUALLY INSPECTED AND DYE PENETRANT INSPECTED TO DETECT SURFACE AND SUBSURFACE CRACKS AND DISCONTINUITES IN ACCORDANCE WITH ANSI/AWS D1.1, "STRUCTURAL WELDING CODE - STEEL".
5. ALL WELDS THAT FAIL AN INSPECTION SHALL BE REPAIRED IN ACCORDANCE WITH ANSI/AWS D1.1, "STRUCTURAL WELDING CODE - STEEL".
6. PAINT WITH PRIMER, DAMP PROOF RUST-OLEUM NO 769.