REV	DESCRIPTION	DRAWN	DATE
		APPROVED	DATE
A	ITEM 1 REVISED-SLOT WIDTH WAS .38 NOW .56-PICTORIALLY CORRECT	G SMITH	07-MAY-2013
		D FRIEND/E VILLEGAS	07-MAY-2013

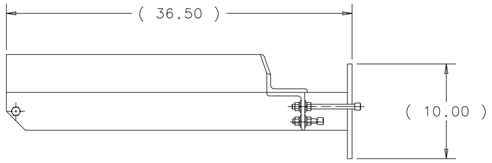

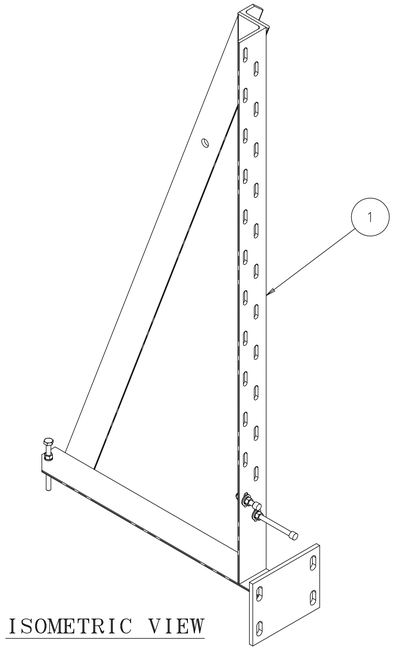

ISOMETRIC VIEW

WEIGHT = 159 LBS

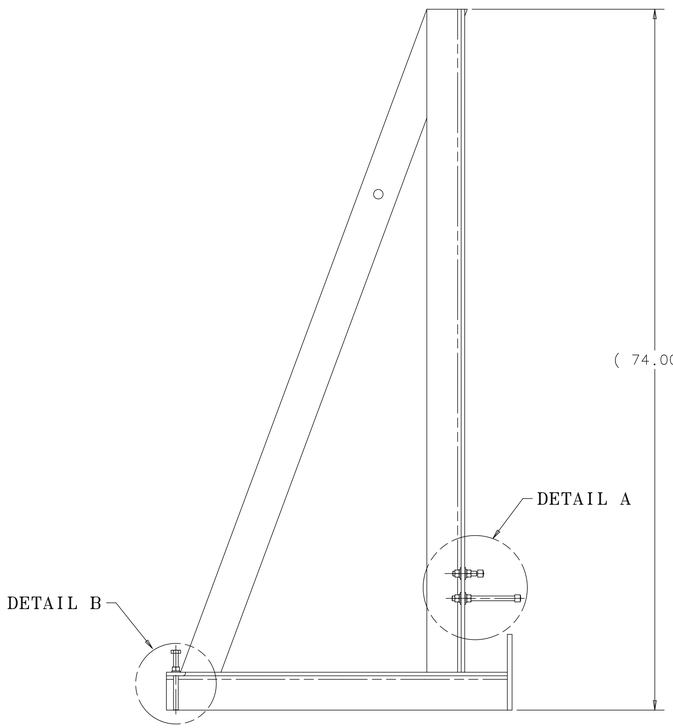

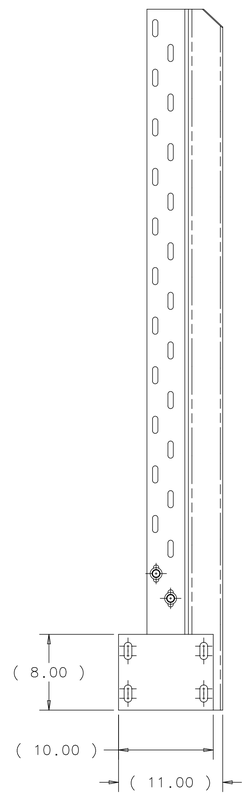

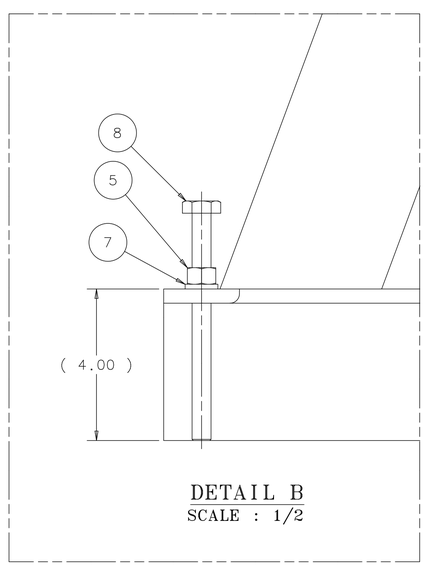

DETAIL B
SCALE : 1/2

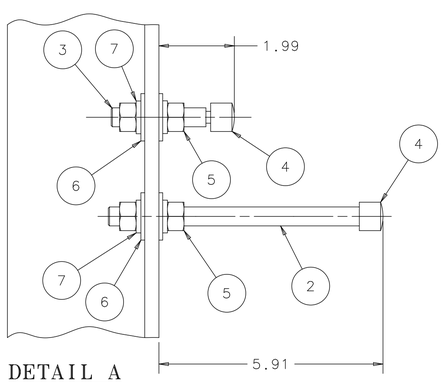

DETAIL A
SCALE : 1/2

ITEM	PART NO.	DESCRIPTION OR SIZE	QTY.
8	COML	HEX BOLT 1/2-13 UNC-2A X 6.00 LG.-STEEL GRADE 8	1
7	COML	LOCK WASHER - 1/2" SCREW SIZE ø.869 CX .125 THK-CS1020	5
6	COML	FLAT WASHER - 1/2" SCREW SIZE ø1.25 CX .10 THK-CS1020	4
5	COML	HEX NUT - 1/2-13 UNC-2B STEEL,GRADE 8	5
4	COML	BUMPER W/THREADED HOLES 5/16-18-McMASTER CARR #9546K43	2
3	MB-493380	SIDE BUMPER THREADED ROD 3.00" LG.	1
2	MB-493671	SIDE BUMPER THREADED ROD 7.00" LG.	1
1	MD-493852	SIDE HORIZ-VERT ALIGNMT WLDNT	1

A

PARTS LIST

UNLESS OTHERWISE SPECIFIED					
.XX	.XXX	ANGLES	ORIGINATOR	E.VILLEGAS	09-APR-2013
± .06	± ---	± ---	DRAWN	G.SMITH	09-APR-2013
			CHECKED	D.FRIEND	17-APR-2013
			APPROVED	E.VILLEGAS	25-APR-2013

1. BREAK ALL SHARP EDGES .015 MAX.
2. DO NOT SCALE DRAWING.
3. DIMENSIONS BASED UPON ASME Y14.5M-1994
4. MAX. ALL MACH. SURFACES
5. DRAWING UNITS: U.S. INCH

USED ON: ME-493647

MATERIAL: SEE PARTS LIST ABOVE

FERMI NATIONAL ACCELERATOR LABORATORY
UNITED STATES DEPARTMENT OF ENERGY

NOVA-NEAR_DETECTOR
ND 24 PLANE BLOCK ASSY TABLE
SIDE HORIZ-VERT PLNE ALIGMT FIXT

SCALE	DRAWING NUMBER	SHEET	REV
1:8 & AS NOTED	3929.330-MD-493651	1 OF 1	A

CREATED WITH : Ideas12NXSeries | GROUP: PPD/MECHANICAL DEPARTMENT

NOTICE: IMAGE OBTAINED FROM FERMILAB
Computer Aided Design Group.
This image is an uncontrolled document and may not be the current, approved version.

This information is provided for REFERENCE use only. Not for MANUFACTURE, or DESIGN INFORMATION. All information contained in this document represents work sponsored by an agency of the U.S. Government. Neither the U.S. Government nor any agency thereof, nor Universities Research Association, Inc., nor any of their employees or officers, makes any warranty, express or implied, or assumes any legal liability or responsibility for the accuracy, completeness, or usefulness of any information, apparatus, product or process disclosed, or represents that its use would not infringe privately owned rights.