REV	DESCRIPTION	DRAWN	DATE
		APPROVED	DATE

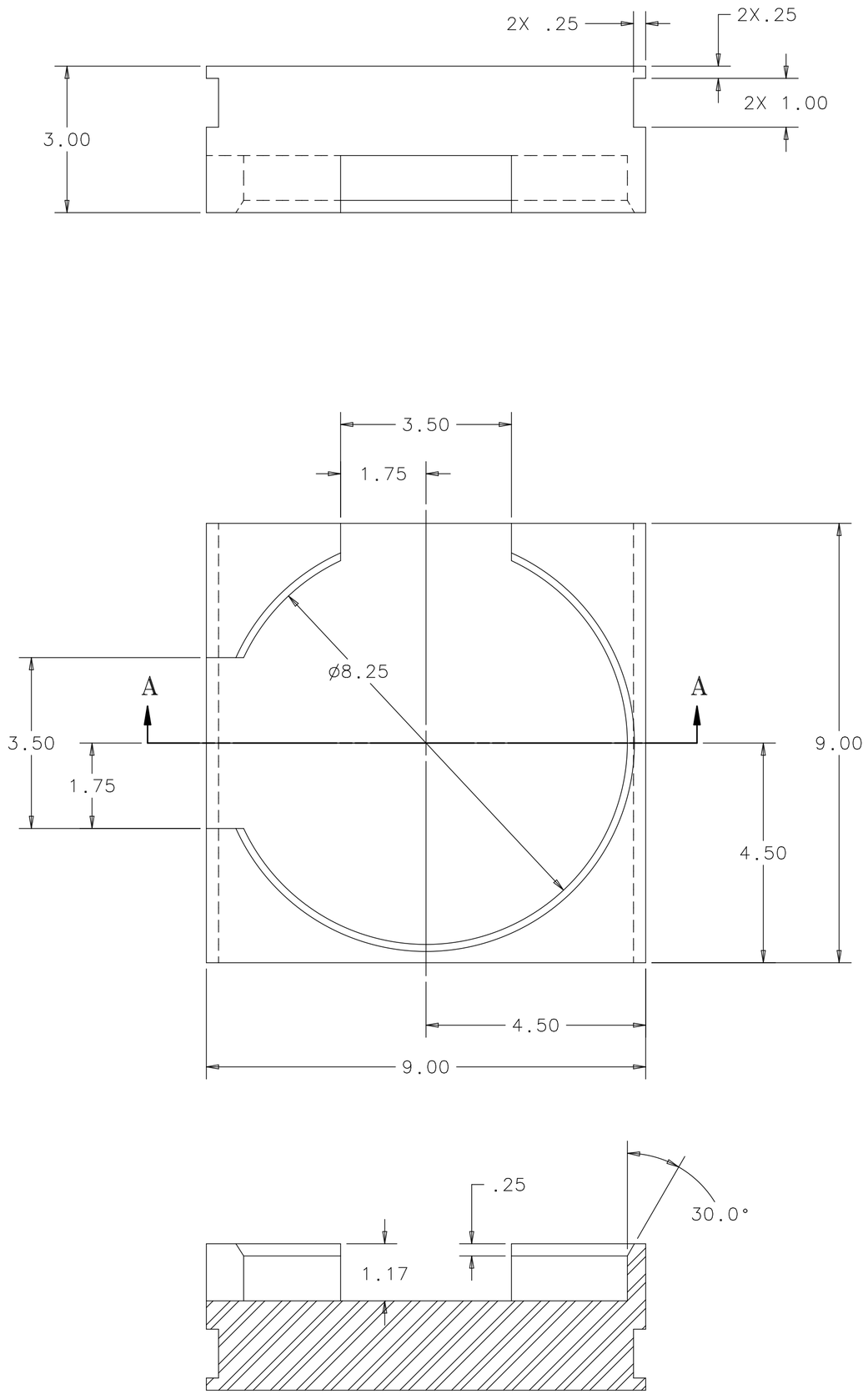

SECTION A-A

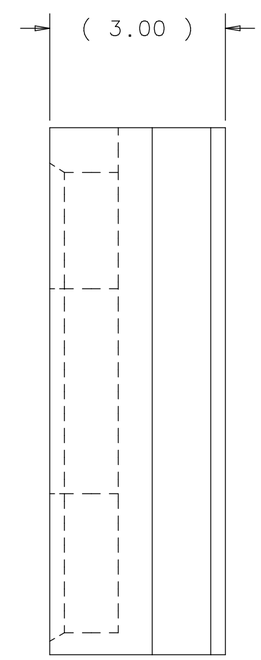

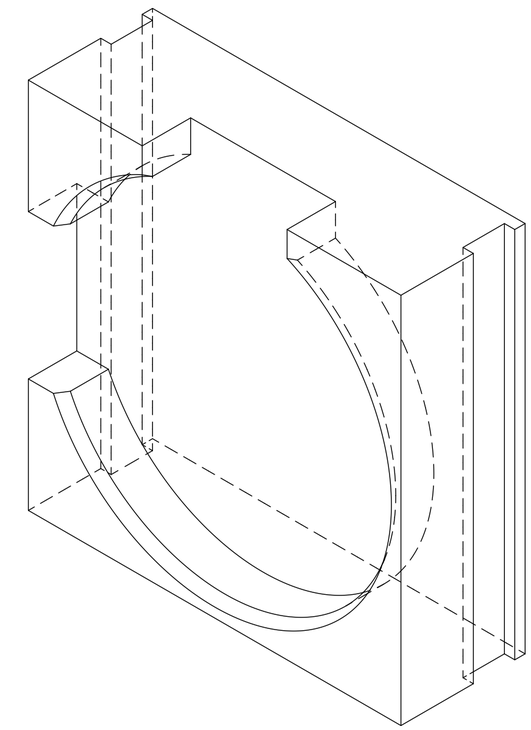

ISOMETRIC VIEW

WEIGHT = 48.6 LBS

UNLESS OTHERWISE SPECIFIED			ORIGINATOR	E.VILLEGAS	12-SEP-2012
.XX	.XXX	ANGLES	DRAWN	G.SMITH	12-SEP-2012
± .03	± ---	±1.0°	CHECKED	D.FRIEND	24-OCT-2012
			APPROVED	E.VILLEGAS	25-OCT-2012

1. BREAK ALL SHARP EDGES .015 MAX.
2. DO NOT SCALE DRAWING.
3. DIMENSIONS BASED UPON ASME Y14.5M-1994
4. MAX. ALL MACH. SURFACES 125
5. DRAWING UNITS: U.S. INCH

USED ON: ME-489943

MATERIAL: ASTM-A36 STEEL

FERMI NATIONAL ACCELERATOR LABORATORY
UNITED STATES DEPARTMENT OF ENERGY

NOVA-NEAR_DETECTOR MUON CATCHER PLATE W-2.50 X 8.50 X 8.50

SCALE	DRAWING NUMBER	SHEET	REV
1:2	3929.330-MC-489949	1 OF 1	

CREATED WITH : Ideas12NXSeries | GROUP: PPD/MECHANICAL DEPARTMENT

NOTICE: IMAGE OBTAINED FROM FERMILAB
Computer Aided Design Group.

This image is an uncontrolled document and may not be the current, approved version.

This information is provided for REFERENCE use only. Not for MANUFACTURE, or DESIGN INFORMATION. All information contained in this document represents work sponsored by an agency of the U.S. Government. Neither the U.S. Government nor any agency thereof, nor Universities Research Association, Inc., nor any of their employees or officers, makes any warranty, express or implied, or assumes any legal liability or responsibility for the accuracy, completeness, or usefulness of any information, apparatus, product or process disclosed, or represents that its use would not infringe privately owned rights.