REV	DESCRIPTION	DRAWN	DATE
		APPROVED	DATE

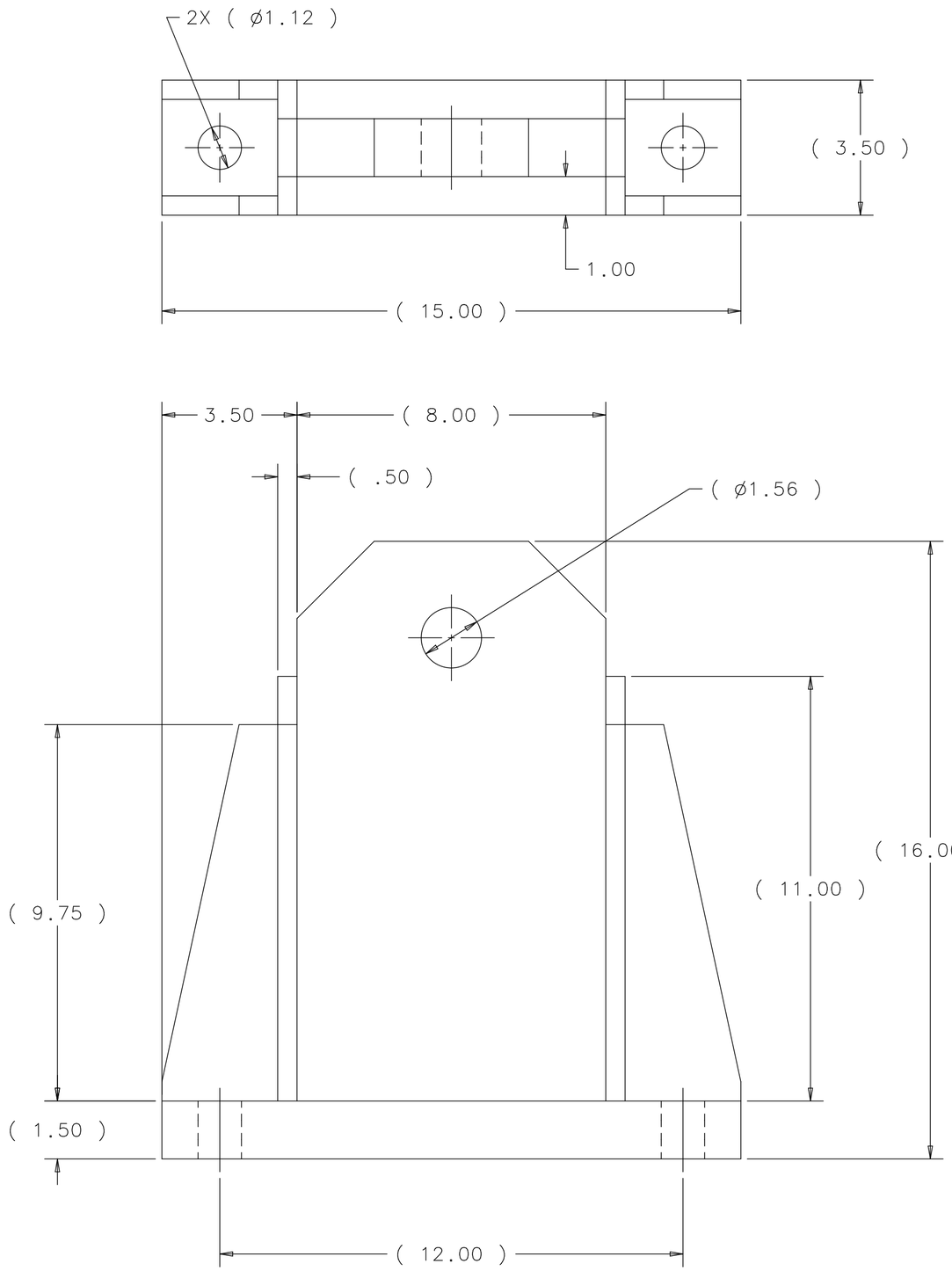

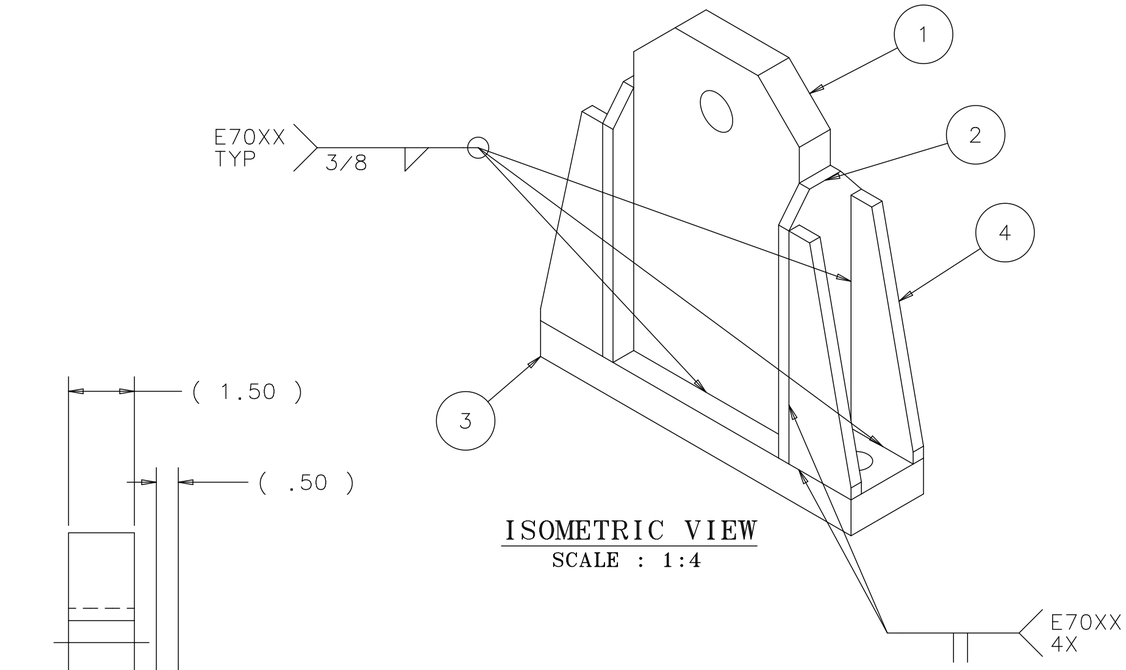

ISOMETRIC VIEW
SCALE : 1:4

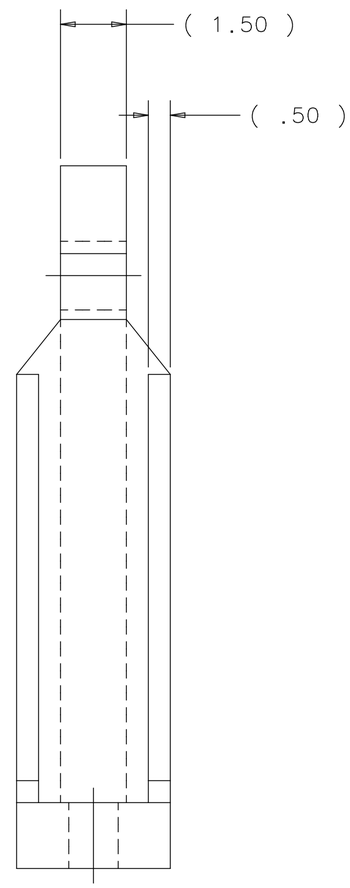

WEIGHT = 91 LBS

ITEM	PART NO.	DESCRIPTION OR SIZE	QTY.
4	MB-493240	GUSSET	4
3	MB-493474	BASE PLATE	1
2	MB-493239	STIFFENER PLATE	2
1	MB-493238	UPRIGHT	1

PARTS LIST

UNLESS OTHERWISE SPECIFIED			ORIGINATOR	E.VILLEGAS	20-FEB-2013
.XX	.XXX	ANGLES	DRAWN	G.SMITH	20-FEB-2013
± .03	± ---	± ---	CHECKED	D.FRIEND	14-MAR-2013
			APPROVED	E.VILLEGAS	18-MAR-2013

1. BREAK ALL SHARP EDGES .015 MAX.
2. DO NOT SCALE DRAWING.
3. DIMENSIONS BASED UPON ASME Y14.5M-1994
4. MAX. ALL MACH. SURFACES ---
5. DRAWING UNITS: U.S. INCH

USED ON: MD-493457

MATERIAL: SEE PARTS LIST ABOVE

FERMI NATIONAL ACCELERATOR LABORATORY
UNITED STATES DEPARTMENT OF ENERGY

NOVA-NEAR_DETECTOR SPREADER BAR 15 TON ASSY LIFTING YOKE 7.5 TON WELDMENT

SCALE	DRAWING NUMBER	SHEET	REV
3:8 & AS NOTED	3929.330-MC-493473	1 OF 1	

CREATED WITH : Ideas12NXSeries | GROUP: PPD/MECHANICAL DEPARTMENT

NOTICE: IMAGE OBTAINED FROM FERMILAB
Computer Aided Design Group.

This image is an uncontrolled document and may not be the current, approved version.

This information is provided for REFERENCE use only. Not for MANUFACTURE, or DESIGN INFORMATION. All information contained in this document represents work sponsored by an agency of the U.S. Government. Neither the U.S. Government nor any agency thereof, nor Universities Research Association, Inc., nor any of their employees or officers, makes any warranty, express or implied, or assumes any legal liability or responsibility for the accuracy, completeness, or usefulness of any information, apparatus, product or process disclosed, or represents that its use would not infringe privately owned rights.