REV	DESCRIPTION	DRAWN	DATE
		APPROVED	DATE

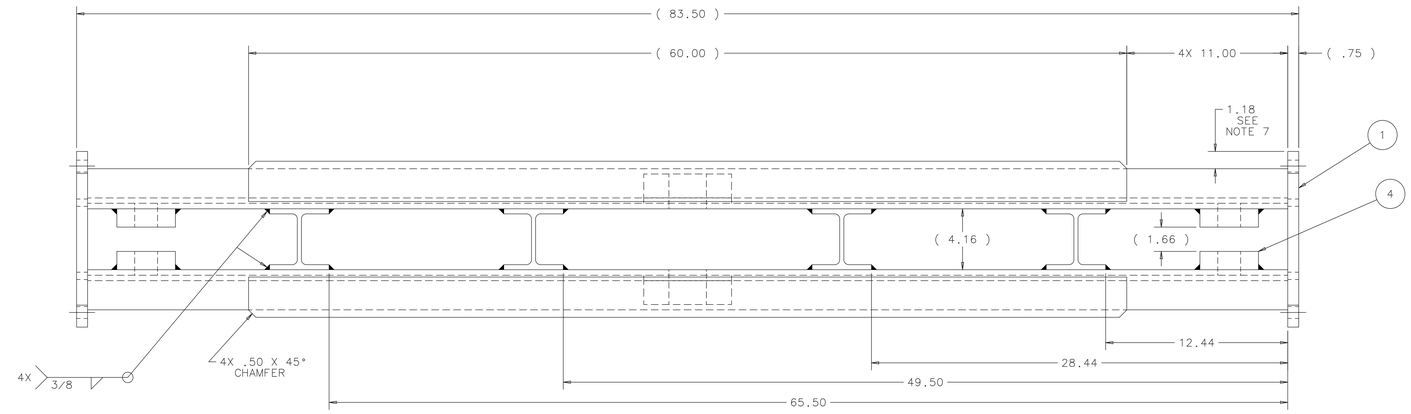

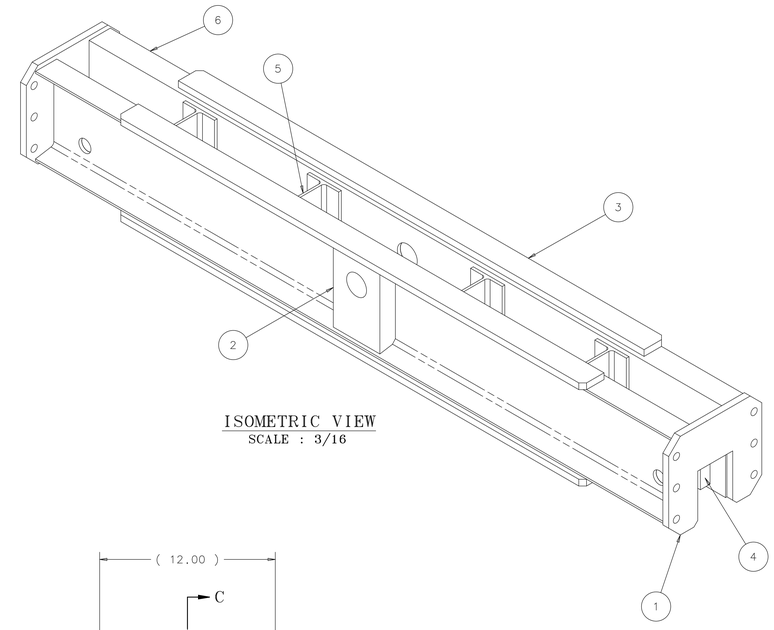

ISOMETRIC VIEW
SCALE : 3/16

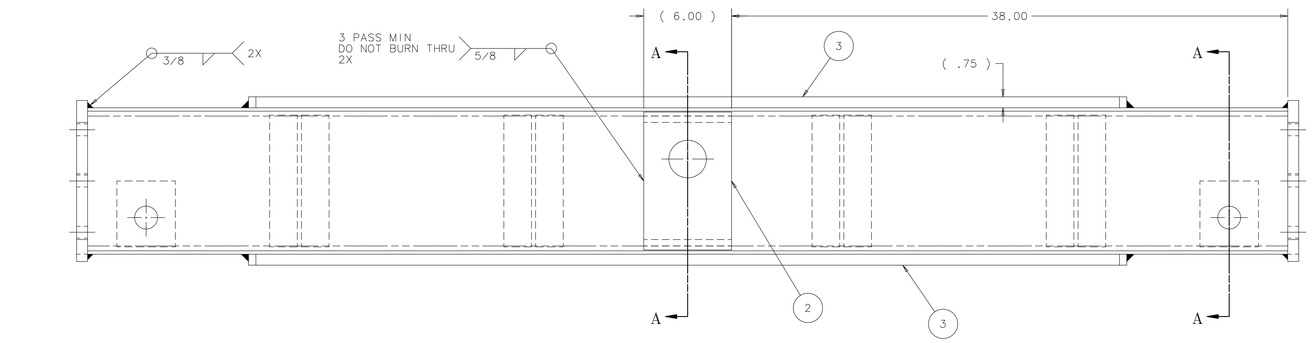

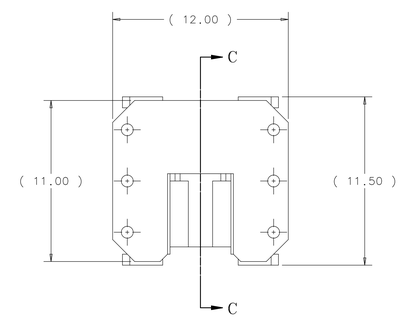

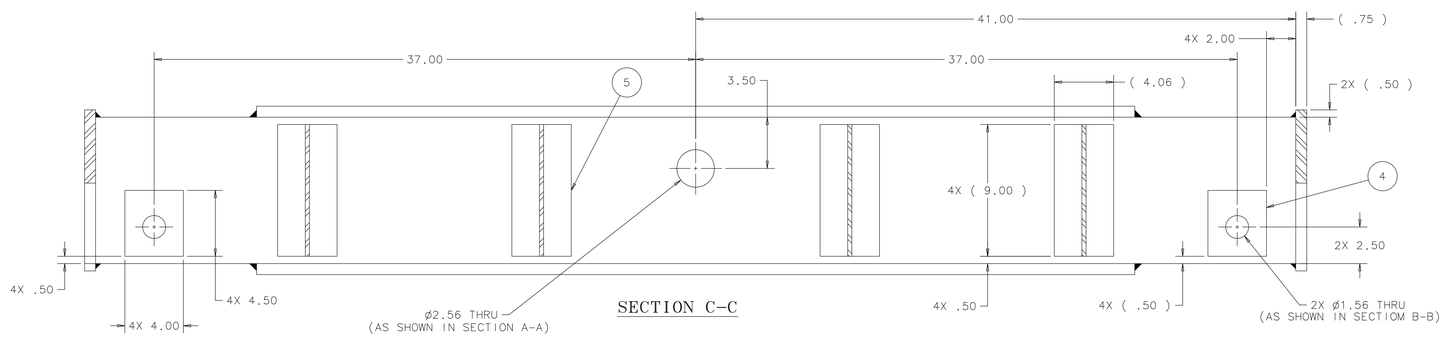

SECTION C-C

WEIGHT = 570 LBS

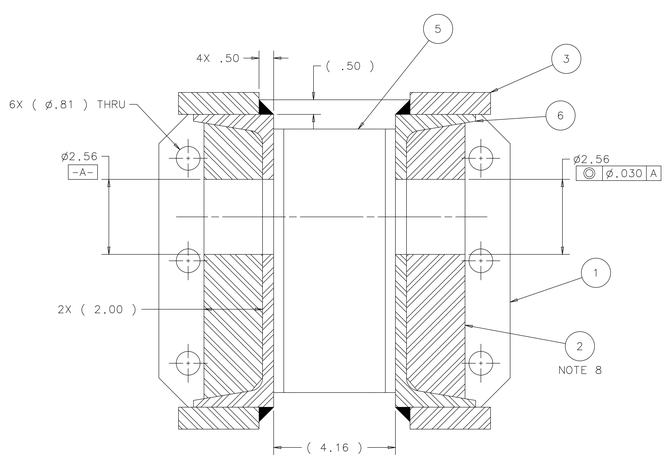

SECTION A-A
SCALE : 1:2

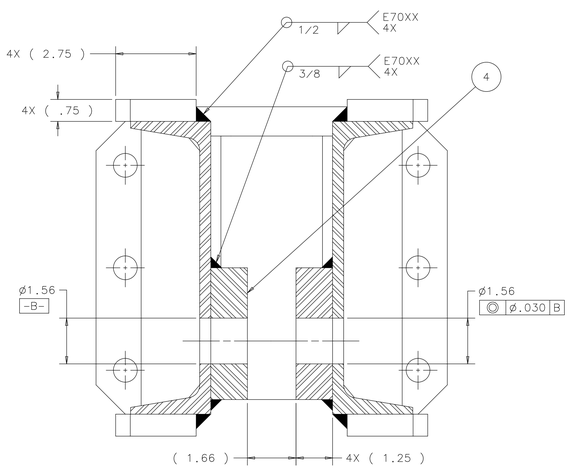

SECTION B-B
SCALE : 1:2

NOTES:

1. ALL WELDS TO BE E70XX OR EQUIVALENT.
2. ALL WELDING SHALL BE IN ACCORDANCE WITH ANSI/AWS D1.1, "STRUCTURAL WELDING CODE - STEEL"
3. ALL WELDS SHALL BE MADE IN A SEQUENCE THAT WILL BALANCE THE APPLIED WELDING HEAT WHILE THE WELDING PROGRESSES. THE PROCEDURE AND SEQUENCE SHALL BE DESIGNED TO MINIMIZE DISTORTION AND SHRINKAGE STRESSES.
4. ALL WELDS SHALL BE VISUALLY INSPECTED AND DYE PENETRANT INSPECTED TO DETECT SURFACE AND SUBSURFACE CRACKS AND DISCONTINUITES IN ACCORDANCE WITH ANSI/AWS D1.1, "STRUCTURAL WELDING CODE - STEEL".
5. ALL WELDS THAT FAIL AN INSPECTION SHALL BE REPAIRED IN ACCORDANCE WITH ANSI/AWS D1.1, "STRUCTURAL WELDING CODE - STEEL".
6. PAINT WITH PRIMER, DAMP PROOF RUST-OLEUM NO 769.
7. ITEM 1 TO BE CENTERED PRIOR TO WELDING.
8. ITEM 2 - COPE TO FIT (AS SHOWN IN SECTION A-A) TO DETERMINE SHAPE AND HEIGHT OF PART.

ITEM	PART NO.	DESCRIPTION OR SIZE	QTY.
6	COML	STEEL CHANNEL-C10 X 20 LBS/FT X 82.00 LG.ASTM A36	2
5	COML	STEEL WIDE FLANGE BEAM W4 X 13 X 9.00" LG.	4
4	COML	STEEL FLAT- 1.25 X 4.00 X 4.50 LG. - ASTM A36	4
3	COML	STEEL FLAT- .75 X 2.75 X 60.00 LG. ASTM A36	4
2	COML	STEEL FLAT - 2.00 X 6.00 LENGTH TBD-ASTM A36 (NOTE 8)	2
1	MC-493328	END WELD PLATE	2

PARTS LIST

UNLESS OTHERWISE SPECIFIED			ORIGINATOR	E.VILLEGAS	14-JAN-2013
.XX	.XXX	ANGLES	DRAWN	G.SMITH	14-JAN-2013
± .06	± ---	± ---	CHECKED	D.FRIEND	15-MAR-2013
			APPROVED	E.VILLEGAS	18-MAR-2013

1. BREAK ALL SHARP EDGES .015 MAX.
2. DO NOT SCALE DRAWING.
3. DIMENSIONS BASED UPON ASME Y14.5M-1994
4. MAX. ALL MACH. SURFACES 125 √
5. DRAWING UNITS: U.S. INCH

USED ON

MATERIAL: SEE PARTS LIST ABOVE

FERMI NATIONAL ACCELERATOR LABORATORY
UNITED STATES DEPARTMENT OF ENERGY

NOVA-NEAR_DETECTOR INSTALLATION & ENGINEERING SPECS SPREADER BAR WELDMENT

SCALE	DRAWING NUMBER	SHEET	REV
1:4 & AS NOTED	3929.330-ME-493316	1 OF 1	

CREATED WITH : Ideas12NXSeries GROUP: PPD/MECHANICAL DEPARTMENT

NOTICE: IMAGE OBTAINED FROM FERMILAB Computer Aided Design Group.
This image is an uncontrolled document and may not be the current, approved version.
This information is provided for REFERENCE use only. DO NOT USE FOR DESIGN INFORMATION.
All information contained in this document represents work sponsored by an agency of the U.S. Government. Neither the U.S. Government nor any agency thereof, nor Universities Research Association, Inc., nor any of their employees or officers, makes any warranty, express or implied, or assumes any legal liability or responsibility for the accuracy, completeness, or usefulness of any information, apparatus, product or process disclosed, or represents that its use would not infringe privately owned rights.