REV	DESCRIPTION	DRAWN	DATE
		APPROVED	DATE
A	ITEM 8 ADDED (MOVED FROM MD-4793455) PICTORIAL UPDATE	G SMITH	06-MAY-2013
		D FRIENDVE VILLEGAS	06-MAY-2013

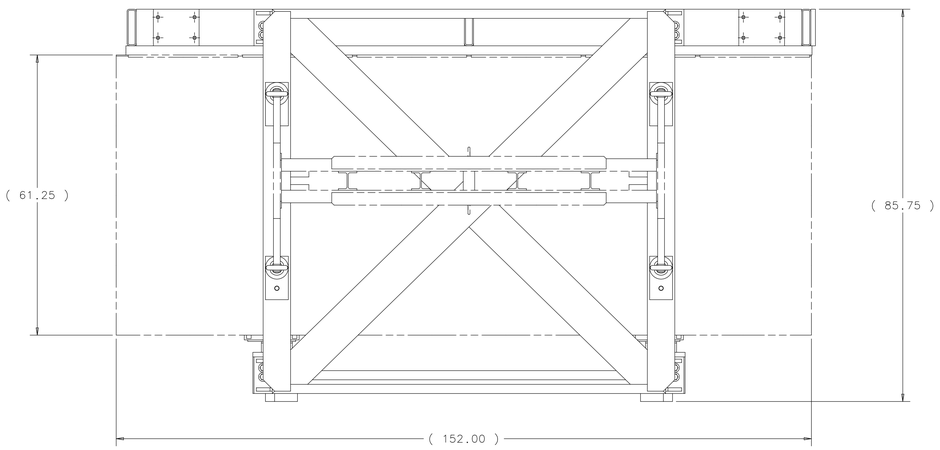

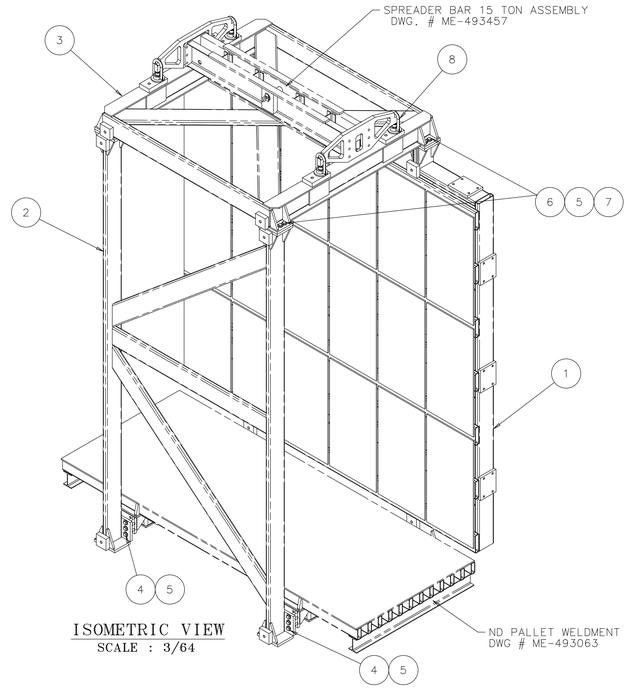

ISOMETRIC VIEW
SCALE : 3/64

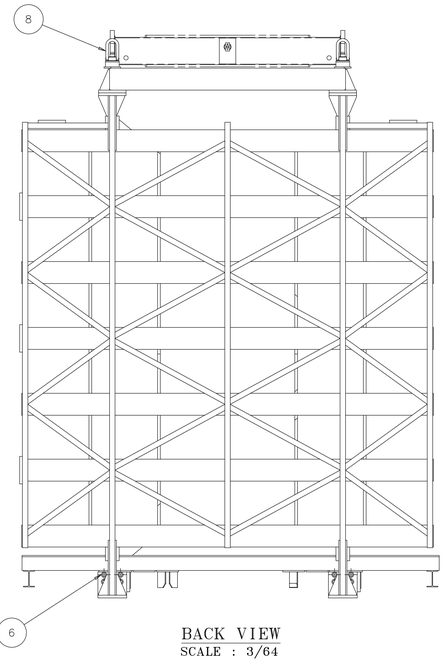

BACK VIEW
SCALE : 3/64

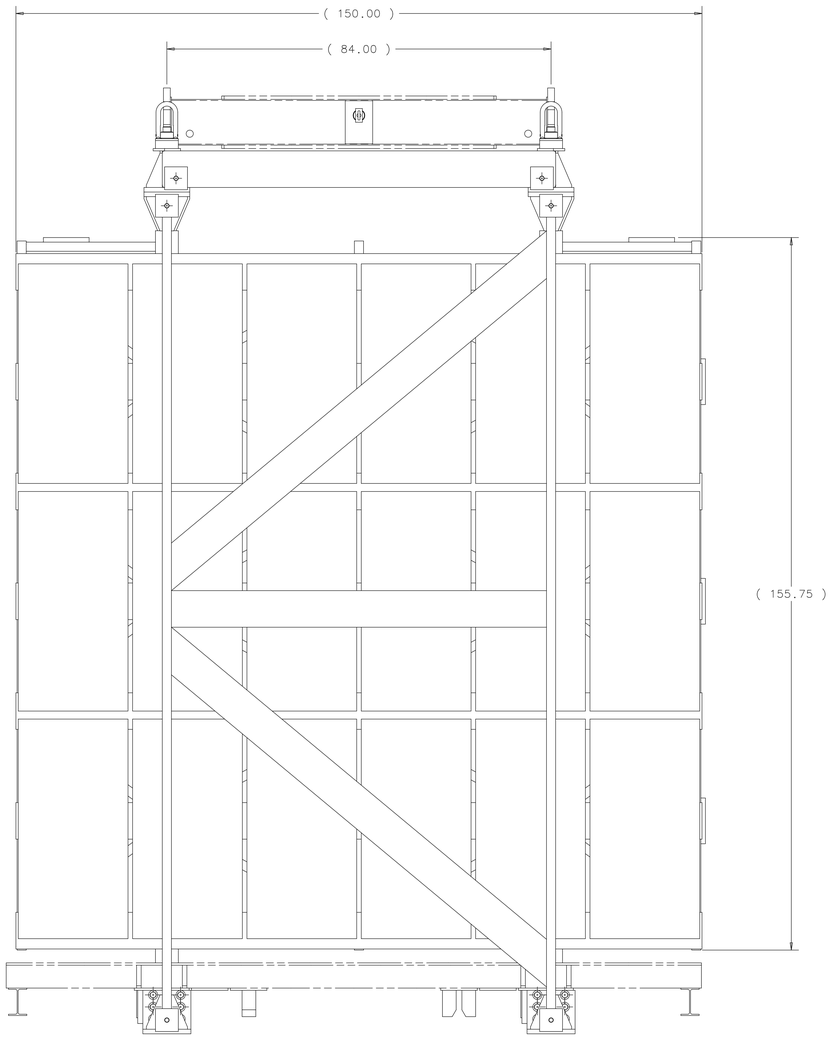

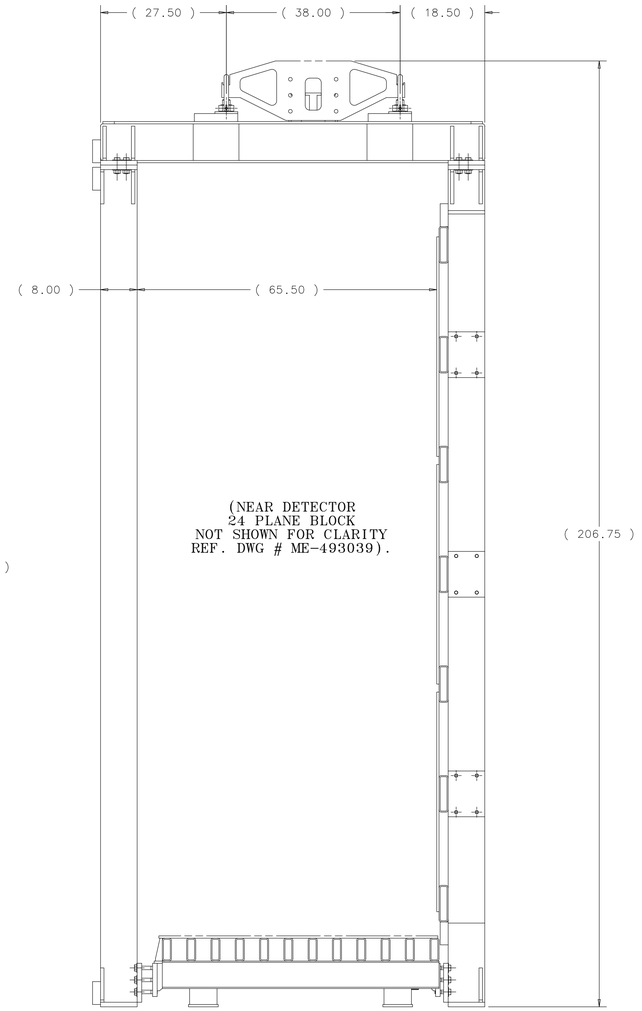

WEIGHT = 11,511 LBS
(WEIGHT INCLUDES SPREADER BAR AND PALLET)

ITEM	PART NO.	DESCRIPTION OR SIZE	QTY.
8	McMASTER CARR	WIDE BASE HOIST RING - 10K CAPACITY - PART #3070T54	4
7	COML	HEX NUT - 3/4-10 UNC-2B GRADE 8 ALLOY STEEL	16
6	COML	HEX HD. SCREW 3/4-10 UNC-2A X 3.00 LG. GRADE 8 ALLOY STEEL	28
5	COML	FLAT WASHER - 3/4" SCREW SIZE ALLOY STEEL	40
4	COML	HEX HD. SCREW 3/4-10 UNC-2A X 4.50 LG. GRADE 8 ALLOY STEEL	12
3	ME-493455	TABLE TOP FRAME ASSEMBLY	1
2	ME-493453	TABLE VERTICAL U.S. FRAME ASSEMBLY	1
1	ME-493418	TABLE VERTICAL D.S. FRAME ASSEMBLY	1

PARTS LIST

UNLESS OTHERWISE SPECIFIED					
.XX	.XXX	ANGLES	ORIGINATOR	E.VILLEGAS	14-FEB-2013
			DRAWN	G.SMITH	14-FEB-2013
± ---	± ---	± ---	CHECKED	D.FRIEND	19-MAR-2013
			APPROVED	E.VILLEGAS	19-MAR-2013

1. BREAK ALL SHARP EDGES .015 MAX.
2. DO NOT SCALE DRAWING.
3. DIMENSIONS BASED UPON ASME Y14.5M-1994
4. MAX. ALL MACH. SURFACES 125
5. DRAWING UNITS: U.S. INCH

USED ON

MATERIAL
SEE PARTS LIST ABOVE

FERMI NATIONAL ACCELERATOR LABORATORY
UNITED STATES DEPARTMENT OF ENERGY

NOVA-NEAR_DETECTOR TRANSPORT N ASSEMBLE TABLE SPECIAL

SCALE	DRAWING NUMBER	SHEET	REV
5:64 & AS NOTED	3929.330-ME-493458	1 OF 1	A

CREATED WITH : Ideas12NXSeries GROUP: PPD/MECHANICAL DEPARTMENT

NOTICE: IMAGE OBTAINED FROM FERMILAB
Computer Aided Design Group.
This image is an uncontrolled document and may not be the current, approved version.

This information is provided for REFERENCE use only. Not for MANUFACTURE or DESIGN INFORMATION.
All information contained in this document represents work sponsored by an agency of the U.S. Government. Neither the U.S. Government nor any agency thereof, nor Universities Research Association, Inc., nor any of their employees, makes any warranty, express or implied, or assumes any legal liability or responsibility for the accuracy, completeness, or usefulness of any information, apparatus, product or process disclosed, or represents that its use would not infringe privately owned rights.