REV	DESCRIPTION	DRAWN	DATE
		APPROVED	DATE

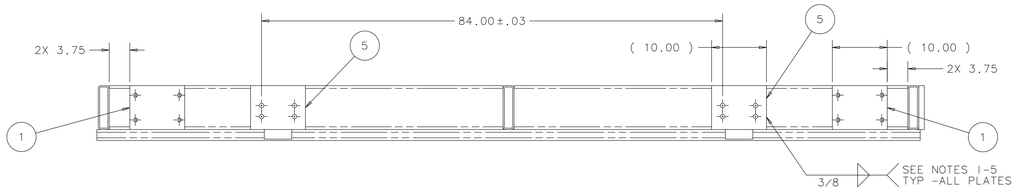

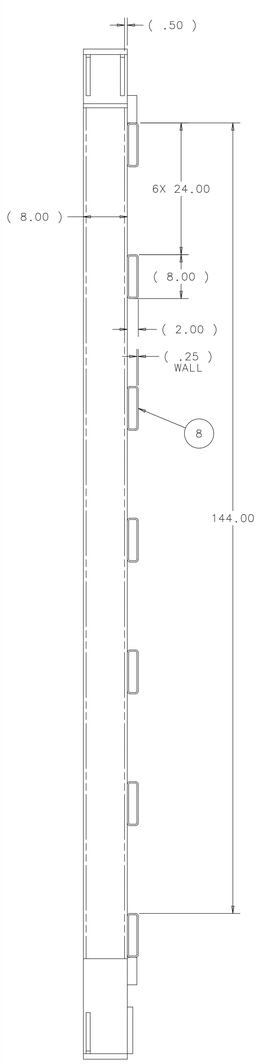

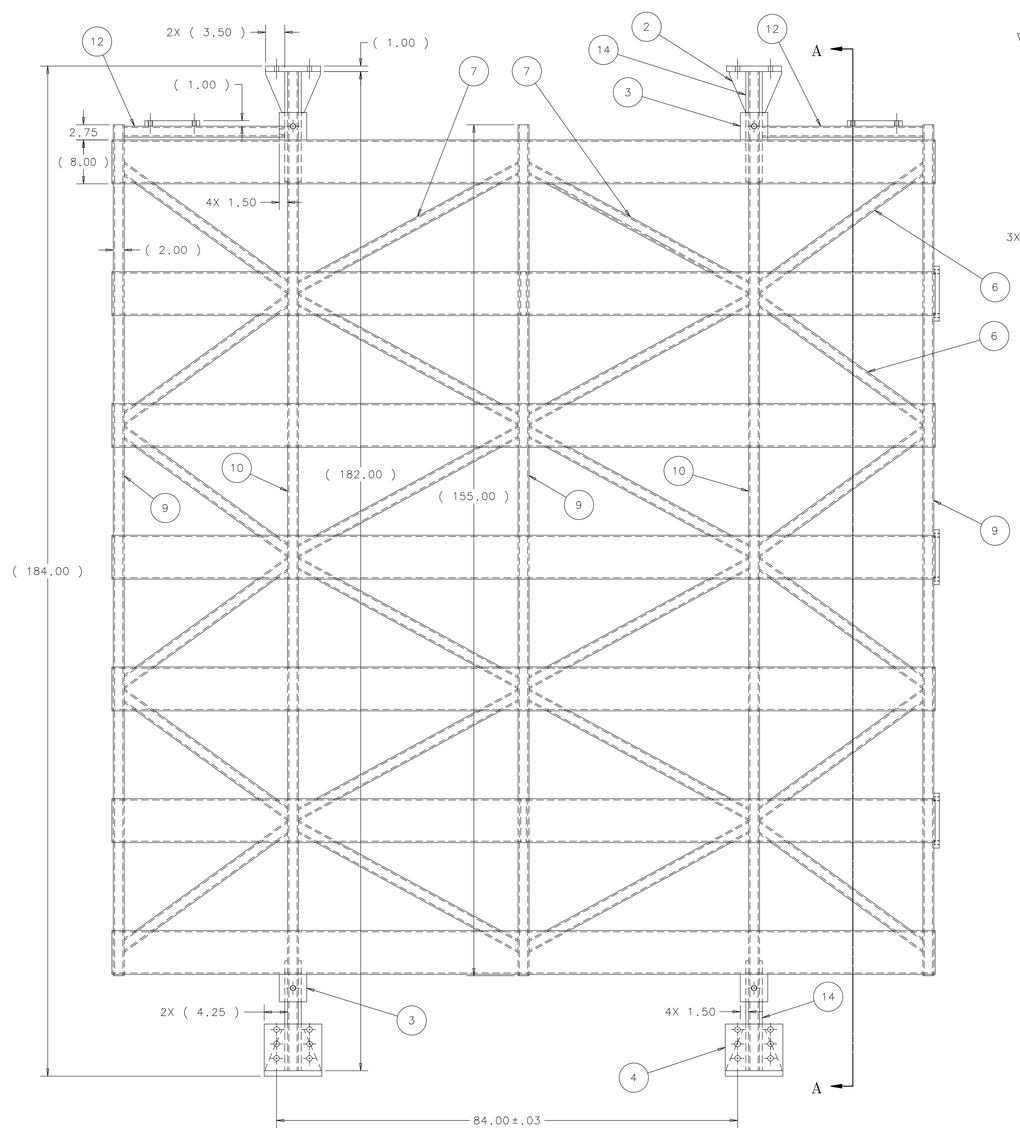

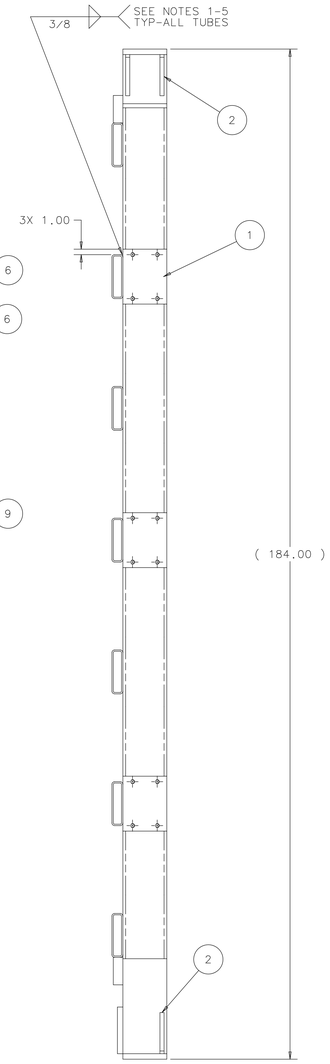

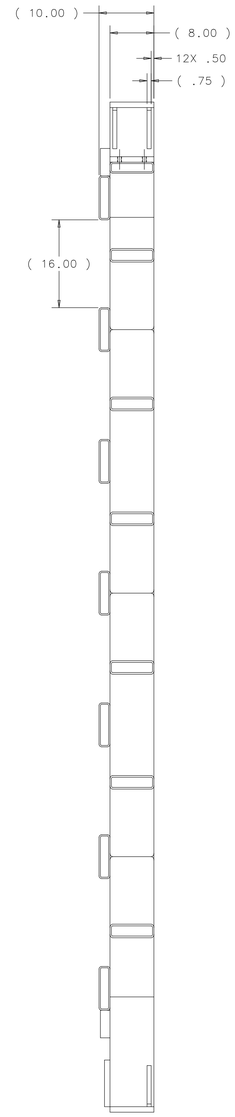

SECTION A-A

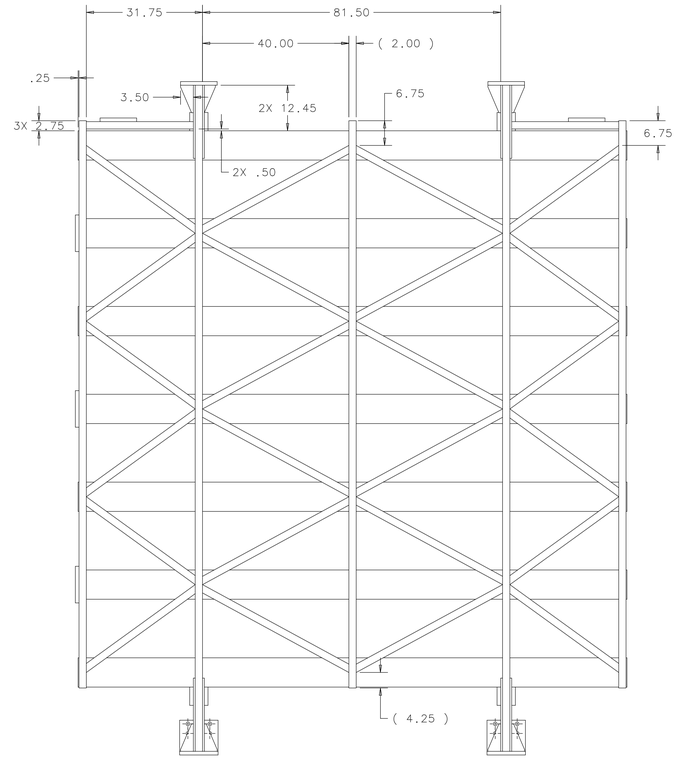

BACK VIEW
SCALE : 1:16

WEIGHT = 4,325 LBS

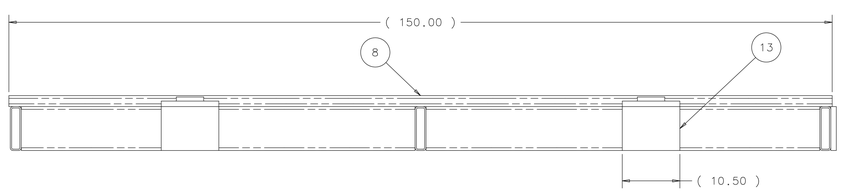

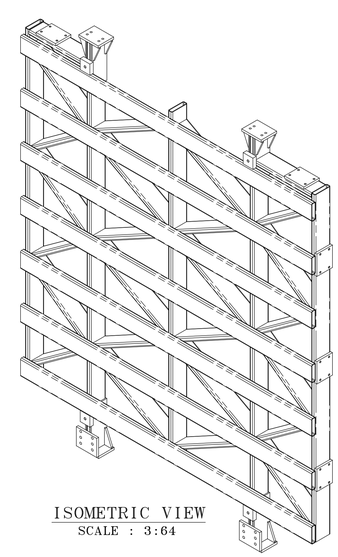

ISOMETRIC VIEW
SCALE : 3:64

ITEM	PART NO.	DESCRIPTION OR SIZE	QTY.
14	COML	PLATE - .50 X 8.00 X 20.00 ASTM A36 STEEL	8
13	COML	PLATE BOTTOM REST-1.00 X 8.00 X 10.50 ASTM A36 STEEL	2
12	COML	TUBE-8 X 2 X 1/4 X 29.25 LG. ASTM A500 GRADE B	2
10	COML	TUBE-8 X 2 X 1/4 X 182.00 LG. ASTM A500 GRADE B	2
9	COML	TUBE-8 X 2 X 1/4 X 155.00 LG. ASTM A500 GRADE B	3
8	COML	TUBE-8 X 2 X 1/4 X 150.00 LG. ASTM A500 GRADE B	7
7	MC-493392	TUBE - 8 X 2 X 46.60 LG.	12
6	MC-493391	TUBE - 8 X 2 X 38.17 LG.	12
5	MC-493390	PLATE TOP ATTACHMENT	2
4	MC-493389	PLATE ATTACHMENT	2
3	MC-493388	HOIST RING MOUNTING PAD	4
2	MC-493445	GUSSET 7.50 LG.	12
1	MC-493385	ALIGNMENT FASTENING PLATE	5

PARTS LIST

NOTES:

1. ALL WELDS TO BE E70XX OR EQUIVALENT. (ALL WELD SIZE 3/8).
2. ALL WELDING SHALL BE IN ACCORDANCE WITH ANSI/AWS D1.1, "STRUCTURAL WELDING CODE - STEEL"
3. ALL WELDS SHALL BE MADE IN A SEQUENCE THAT WILL BALANCE THE APPLIED WELDING HEAT WHILE THE WELDING PROGRESSES. THE PROCEDURE AND SEQUENCE SHALL BE DESIGNED TO MINIMIZE DISTORTION AND SHRINKAGE STRESSES.
4. ALL WELDS SHALL BE VISUALLY INSPECTED AND DYE PENETRANT INSPECTED TO DETECT SURFACE AND SUBSURFACE CRACKS AND DISCONTINUITES IN ACCORDANCE WITH ANSI/AWS D1.1, "STRUCTURAL WELDING CODE - STEEL".
5. ALL WELDS THAT FAIL AN INSPECTION SHALL BE REPAIRED IN ACCORDANCE WITH ANSI/AWS D1.1, "STRUCTURAL WELDING CODE - STEEL".
6. PAINT WITH PRIMER, DAMP PROOF RUST-OLEUM NO 769.

UNLESS OTHERWISE SPECIFIED			ORIGINATOR	E.VILLEGAS	30-JAN-2013
.XX	.XXX	ANGLES	DRAWN	G.SMITH	30-JAN-2013
± .06	± ---	± ---	CHECKED	D.FRIEND	19-MAR-2013
			APPROVED	E.VILLEGAS	19-MAR-2013

1. BREAK ALL SHARP EDGES .015 MAX.
2. DO NOT SCALE DRAWING.
3. DIMENSIONS BASED UPON ASME Y14.5M-1994
4. MAX. ALL MACH. SURFACES
5. DRAWING UNITS: U.S.INCH

USED ON: ME-493418

MATERIAL: SEE PARTS LIST ABOVE

FERMI NATIONAL ACCELERATOR LABORATORY
UNITED STATES DEPARTMENT OF ENERGY

NOVA-NEAR_DETECTOR
TABLE D.S. FRAME
WELDMENT

SCALE	DRAWING NUMBER	SHEET	REV
3:32 & AS NOTED	3929.330-ME-493384	1 OF 1	

CREATED WITH : Ideas12NXSeries GROUP: PPD/MECHANICAL DEPARTMENT

NOTICE: IMAGE OBTAINED FROM FERMILAB
Computer Aided Design Group.
This image is an uncontrolled document and may not be the current, approved version.
This information is provided for REFERENCE use only. Not for MANUFACTURE or DESIGN INFORMATION.
All information contained in this document represents work sponsored by an agency of the U.S. Government. Neither the U.S. Government nor any agency thereof, nor Universities Research Association, Inc., nor any of their employees, nor any of their contractors, express or implied, assumes any liability or responsibility for the accuracy, completeness, or usefulness of any information, apparatus, product or process disclosed, or represents that its use would not infringe privately owned rights.