REV	DESCRIPTION	DRAWN	DATE
		APPROVED	DATE

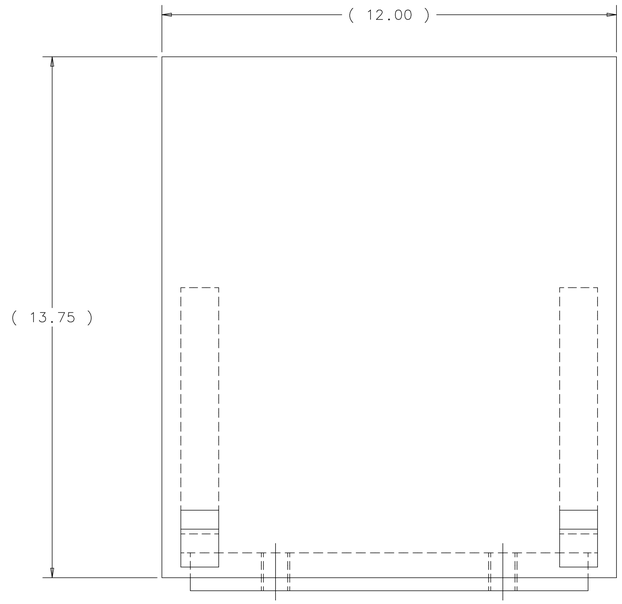

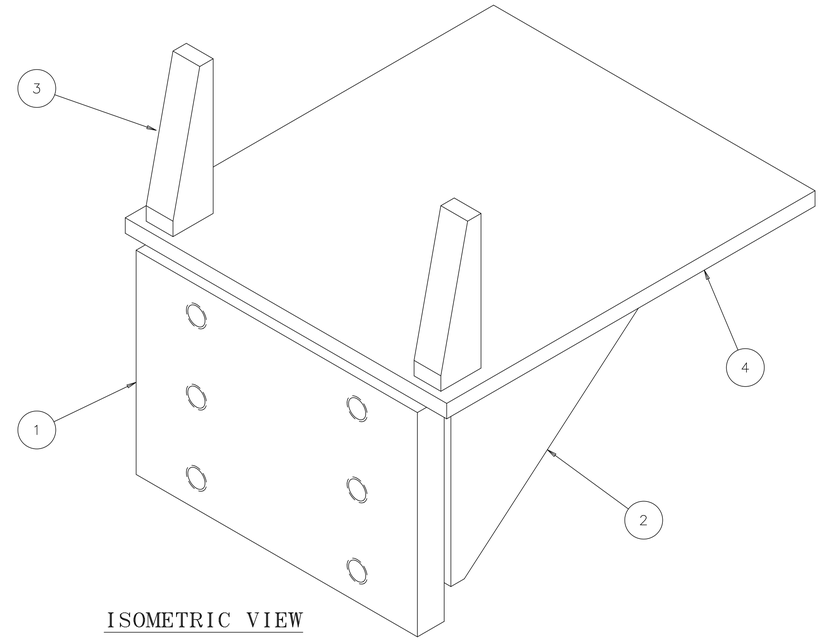

ISOMETRIC VIEW

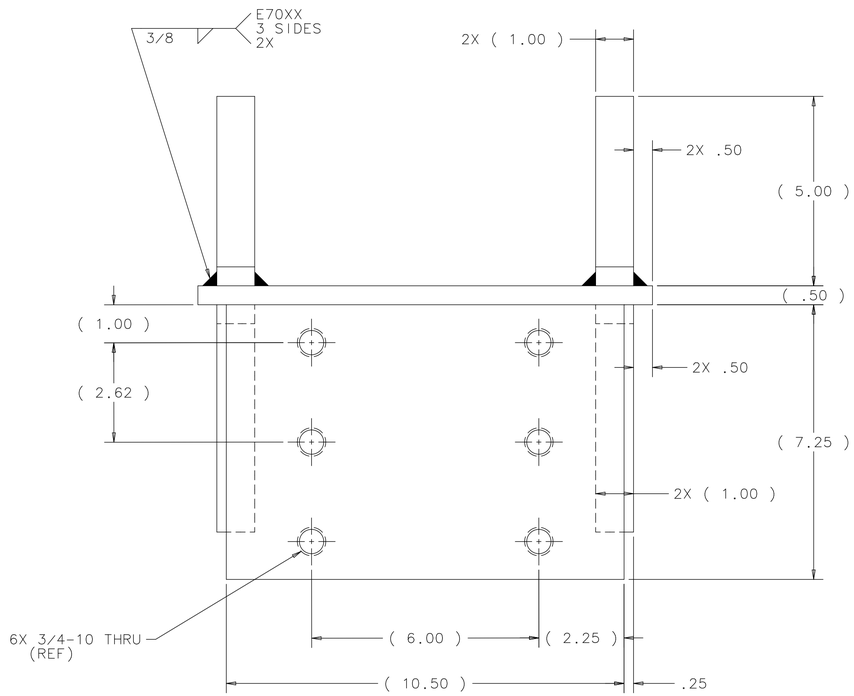

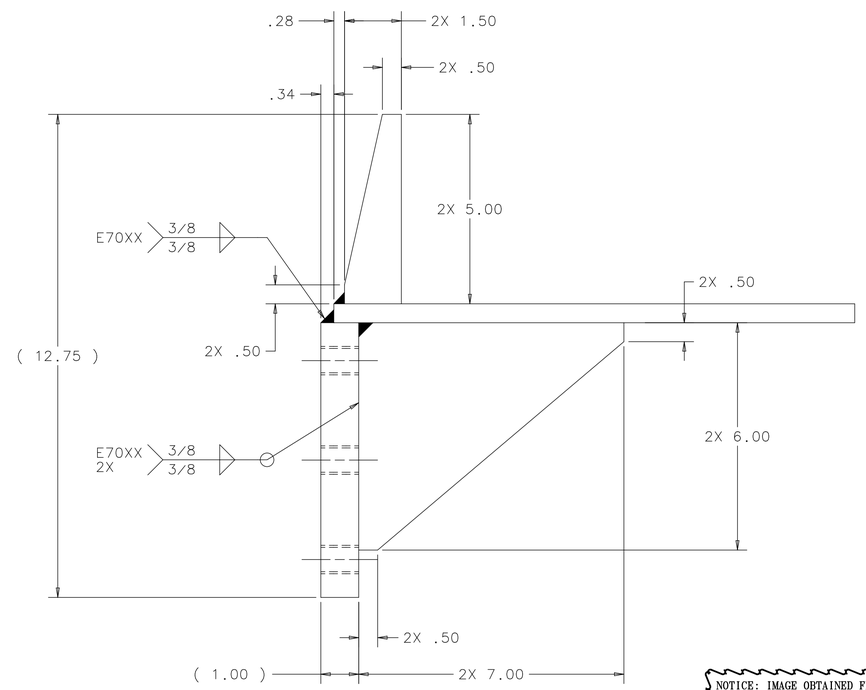

ITEM	PART NO.	DESCRIPTION OR SIZE	QTY.
4	COML	TOP PLATE-1/2 X 12.00 X 13.75 LG. STEEL-ASTM A36	1
3	COML	UPPER GUSSET-1" THICK STEEL-ASTM A36	2
2	COML	LOWER GUSSET-1" THICK STEEL-ASTM A36	2
1	MC-493064	ASSEMBLY TABLE CONNECTION PLATE	1

PARTS LIST

UNLESS OTHERWISE SPECIFIED			ORIGINATOR	E.VILLEGAS	11-JAN-2013
.XX	.XXX	ANGLES	DRAWN	G.SMITH	11-JAN-2013
± .06	± ---	± ---	CHECKED	D.FRIEND	20-MAR-2013
			APPROVED	E.VILLEGAS	20-MAR-2013

1. BREAK ALL SHARP EDGES MAX.
2. DO NOT SCALE DRAWING.
3. DIMENSIONS BASED UPON ASME Y14.5M-1994
4. MAX. ALL MACH. SURFACES 250
5. DRAWING UNITS: U.S. INCH

USED ON: ME-493063

MATERIAL: SEE PARTS LIST ABOVE

FERMI NATIONAL ACCELERATOR LABORATORY
UNITED STATES DEPARTMENT OF ENERGY

NOVA-NEAR_DETECTOR MODULES UPSTREAM ATTACHMENT WELDMENT

SCALE	DRAWING NUMBER	SHEET	REV
1:2	3929.330-MD-493312	1 OF 1	

CREATED WITH : Ideas12NXSeries | GROUP: PPD/MECHANICAL DEPARTMENT

NOTICE: IMAGE OBTAINED FROM FERMILAB
Computer Aided Design Group.
This image is an uncontrolled document and may not be the current, approved version.

This information is provided for REFERENCE use only. Not for MANUFACTURE, or DESIGN INFORMATION. All information contained in this document represents work sponsored by an agency of the U.S. Government. Neither the U.S. Government nor any agency thereof, nor Universities Research Association, Inc., nor any of their employees or officers, makes any warranty, express or implied, or assumes any legal liability or responsibility for the accuracy, completeness, or usefulness of any information, apparatus, product or process disclosed, or represents that its use would not infringe privately owned rights.