| REV | DESCRIPTION | DRAWN | DATE |
|---|---|---|---|
| | | APPROVED | DATE |

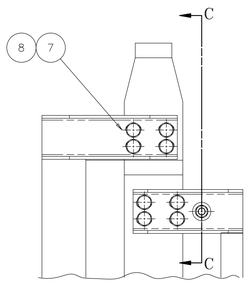


DETAIL B
SCALE : 1:4

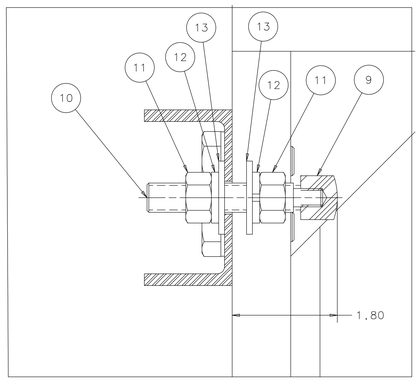


SECTION C-C
SCALE : 1:1
(4 PLACES)

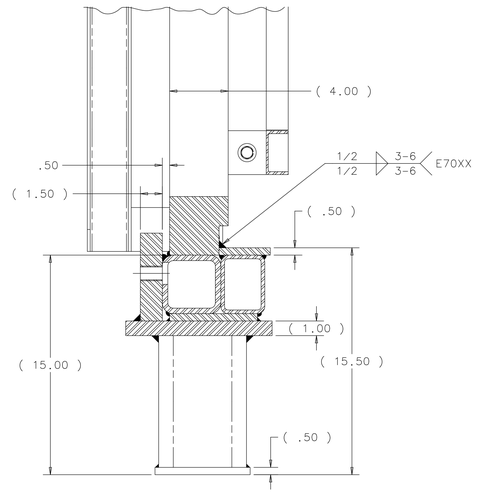


SECTION A-A
SCALE : 1:4

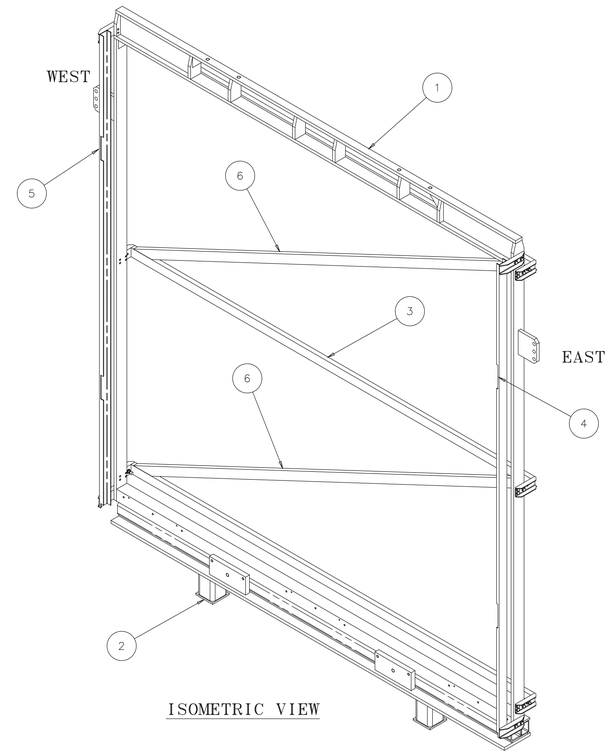


ISOMETRIC VIEW

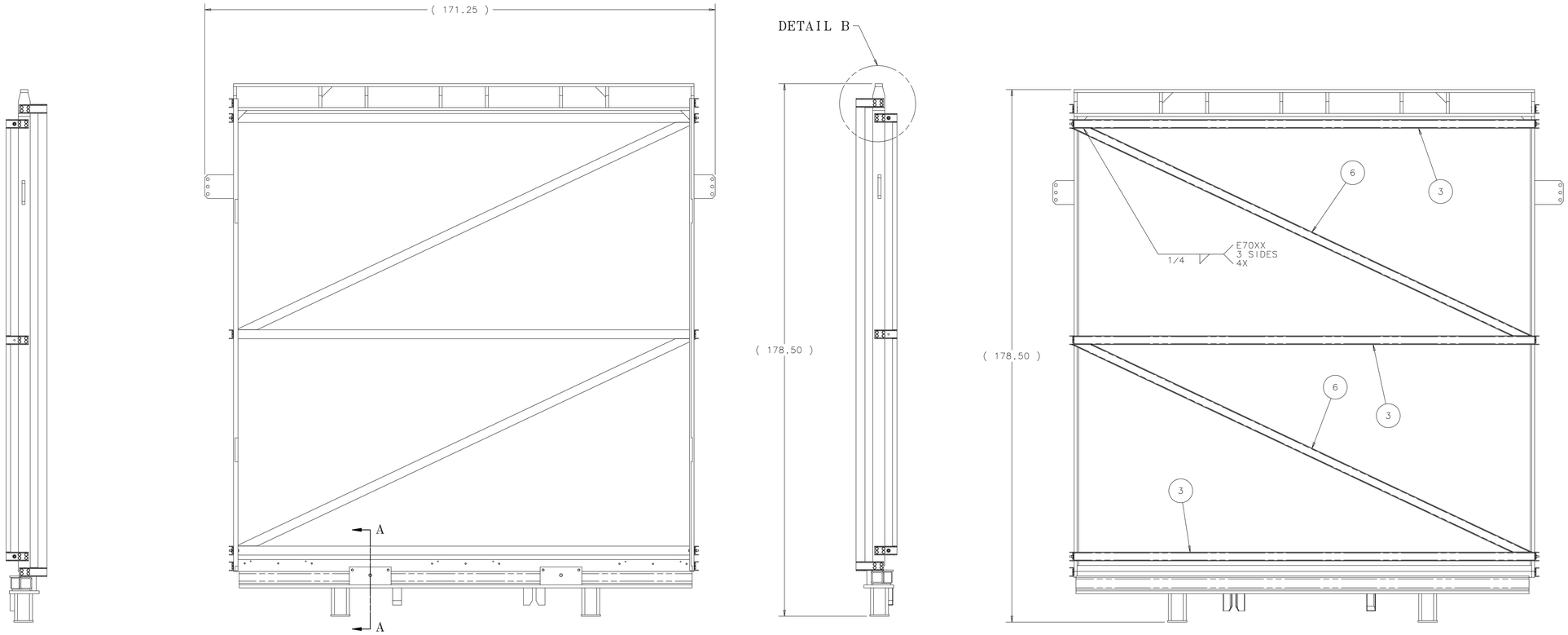


WEIGHT = 2,726 LBS

| ITEM | PART NO. | DESCRIPTION OR SIZE | QTY. |
|---|---|---|---|
| 14 | COML | FLAT WASHER - 1/2" SCREW SIZE STEEL | 8 |
| 12 | COML | LOCK WASHER - 1/2" SCREW SIZE STEEL | 8 |
| 11 | COML | HEX. NUT - 1/2-13 UNC-2B STEEL | 8 |
| 10 | MB-493380 | SIDE BUMPER THREADED ROD | 4 |
| 9 | McMASTER CARR | RUBBER BUMPER WITH THREADED HOLE #9546K43 Ø3/4,5/16-18 | 4 |
| 8 | COML | LOCK WASHER - STEEL 1/2" SCREW SIZE | 40 |
| 7 | COML | HEX HD SCREW STEEL 1/2-13 UNC-2A X 1.25" LG. | 40 |
| 6 | MC-493212 | HORIZ. STBLZR ANGLE BRACKET | 2 |
| 5 | MD-493200 | ND MINI BLK W HORIZ STBLZR WLDNT | 1 |
| 4 | MD-493199 | ND MINI BLK E HORIZ STBLZR WLDNT | 1 |
| 3 | MD-493198 | ND MINI BLK VERT STBLZR WLDNT | 3 |
| 2 | MD-493197 | ND MINI FRAME LOWER WELDMENT | 1 |
| 1 | ME-493196 | ND MINI FRAME UPPER WELDMENT | 1 |

PARTS LIST

| UNLESS OTHERWISE SPECIFIED | | | ORIGINATOR | E.VILLEGAS | 28-JAN-2013 |
|---|---|---|---|---|---|
| .XX | .XXX | ANGLES | DRAWN | G.SMITH | 28-JAN-2013 |
| ± .06 | ± --- | ± --- | CHECKED | D.FRIEND | 01-FEB-2013 |
| | | | APPROVED | E.VILLEGAS | 04-FEB-2013 |

1. BREAK ALL SHARP EDGES .015 MAX.
2. DO NOT SCALE DRAWING.
3. DIMENSIONS BASED UPON ASME Y14.5M-1994
4. MAX. ALL MACH. SURFACES ---/
5. DRAWING UNITS: U.S. INCH

USED ON: ME-493195

MATERIAL: SEE PARTS LIST ABOVE

FERMI NATIONAL ACCELERATOR LABORATORY
UNITED STATES DEPARTMENT OF ENERGY

NOVA-NEAR_DETECTOR
ND MINI BLOCK MODULES
MD MINI BLOCK FRAME ASSY

| SCALE | DRAWING NUMBER | SHEET | REV |
|---|---|---|---|
| 1:16 & AS NOTED | 3929.330-ME-493375 | 1 OF 1 | |

CREATED WITH : Ideas12NXSeries | GROUP: PPD/MECHANICAL DEPARTMENT


NOTICE: IMAGE OBTAINED FROM FERMILAB
Computer Aided Design Group.
This image is an uncontrolled document and may not be the current, approved version.
This information is provided for REFERENCE use only. Not for MANUFACTURE, or DESIGN INFORMATION. All information contained in this document represents work sponsored by an agency of the U.S. Government. Neither the U.S. Government nor any agency thereof, nor Universities Research Association, Inc., nor any of their employees or officers, makes any warranty, express or implied, or assumes any legal liability or responsibility for the accuracy, completeness, or usefulness of any information, apparatus, product or process disclosed, or represents that its use would not infringe privately owned rights.