REV	DESCRIPTION	DRAWN	DATE
		APPROVED	DATE

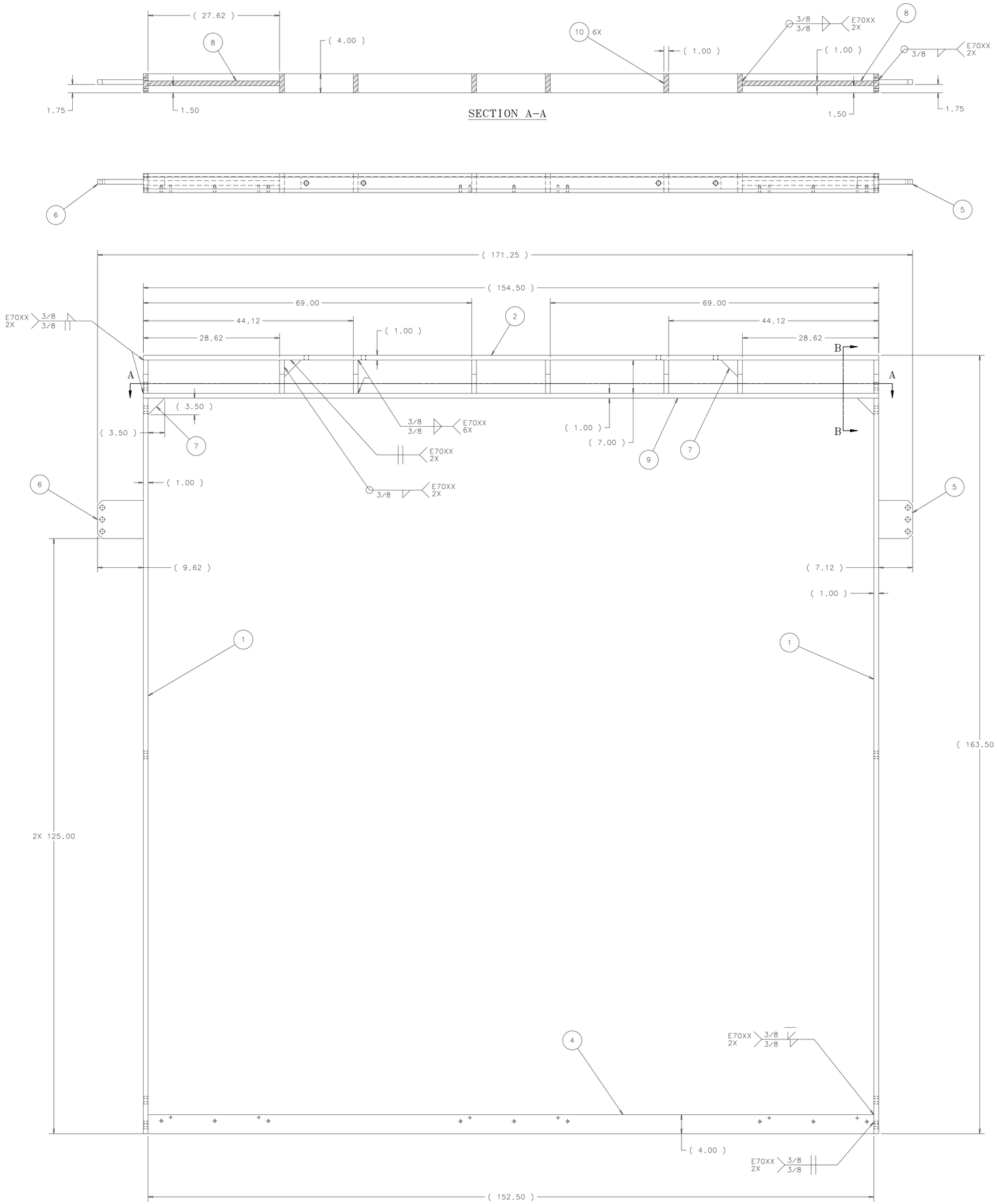

SECTION A-A

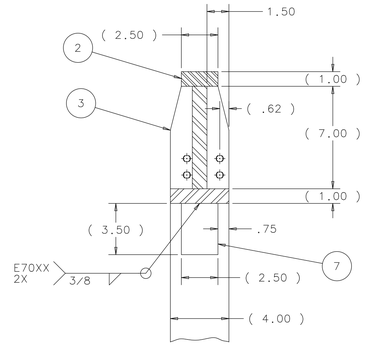

SECTION B-B
SCALE : 1:4
TYP. 2X

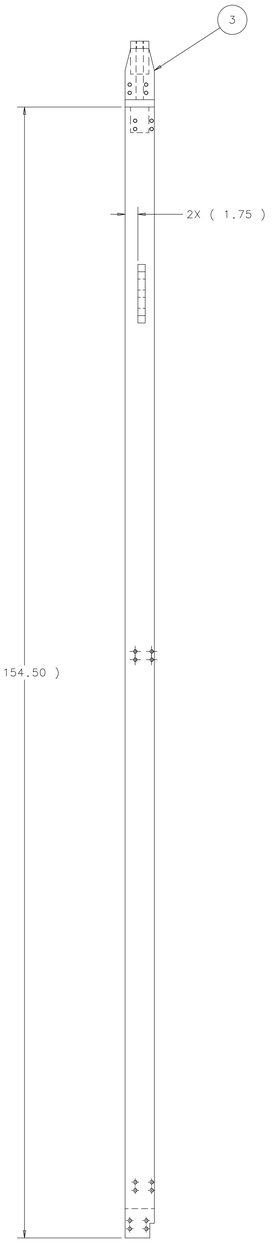

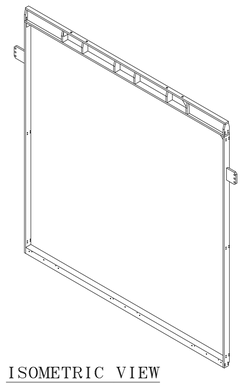

ISOMETRIC VIEW
SCALE : 1/32

WEIGHT = 1,494 LBS

ITEM	PART NO.	DESCRIPTION OR SIZE	QTY.
10	MC-493216	FRAME TOP INNER PLATE	6
9	COML	FRAME LOWER TOP 1 X 4.00 X 154.50 LG.-STEEL A36	1
8	COML	END STIFFENER 1 X 7.00 X 27.62 LG.-STEEL A36	2
7	MB-493207	FRAME GUSSET	4
6	MB-493206	STABILIZING MINI LEFT EAR 1	1
5	MB-493205	STABILIZING MINI RIGHT EAR 1	1
4	MD-493204	FRAME BASE	1
3	MC-493203	FRAME TOP END PLATE	2
2	MC-493202	FRAME UPPER TOP	1
1	MC-493201	FRAME SIDES	2

PARTS LIST

UNLESS OTHERWISE SPECIFIED			ORIGINATOR	E.VILLEGAS	20-NOV-2012
.XX	.XXX	ANGLES	DRAWN	G.SMITH	20-NOV-2012
± .06	± ---	± ---	CHECKED	D.FRIEND	01-FEB-2013
			APPROVED	E.VILLEGAS	04-FEB-2013

1. BREAK ALL SHARP EDGES .015 MAX.
2. DO NOT SCALE DRAWING.
3. DIMENSIONS BASED UPON ASME Y14.5M-1994
4. MAX. ALL MACH. SURFACES 250
5. DRAWING UNITS: U.S. INCH

USED ON: ME-493375

MATERIAL: SEE PARTS LIST ABOVE

FERMI NATIONAL ACCELERATOR LABORATORY
UNITED STATES DEPARTMENT OF ENERGY

NOVA-NEAR_DETECTOR
ND MINI BLOCK MODULES
ND MINI FRAME UPPER WELDMENT

SCALE	DRAWING NUMBER	SHEET	REV
1:16 & AS NOTED	3929.330-ME-493196	1 OF 1	

CREATED WITH : Ideas12NXSeries | GROUP: PPD/MECHANICAL DEPARTMENT

NOTICE: IMAGE OBTAINED FROM FERMILAB
Computer Aided Design Group.
This image is an uncontrolled document and may not be the current, approved version.
This information is provided for REFERENCE use only. Not for MANUFACTURE, or DESIGN INFORMATION. All information contained in this document represents work sponsored by an agency of the U.S. Government. Neither the U.S. Government nor any agency thereof, nor Universities Research Association, Inc., nor any of their employees or officers, makes any warranty, express or implied, or assumes any legal liability or responsibility for the accuracy, completeness, or usefulness of any information, apparatus, product or process disclosed, or represents that its use would not infringe privately owned rights.