REV	DESCRIPTION	DRAWN	DATE
		APPROVED	DATE

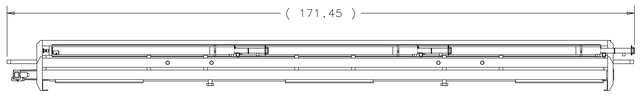

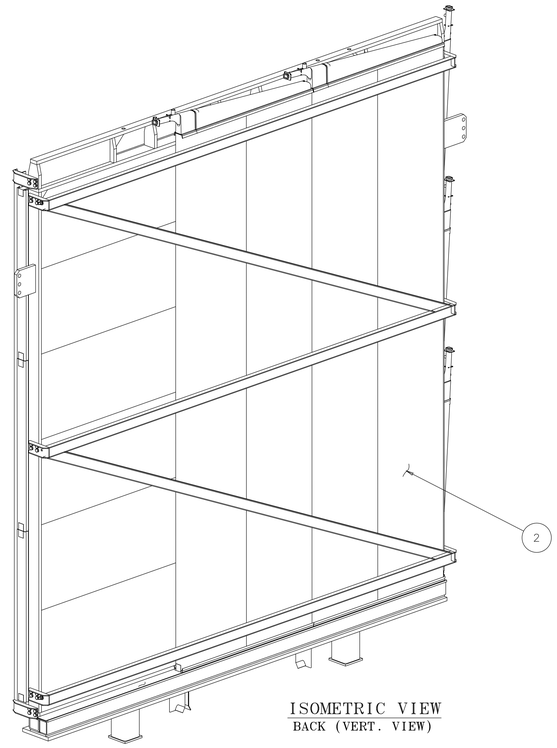

ISOMETRIC VIEW
BACK (VERT. VIEW)

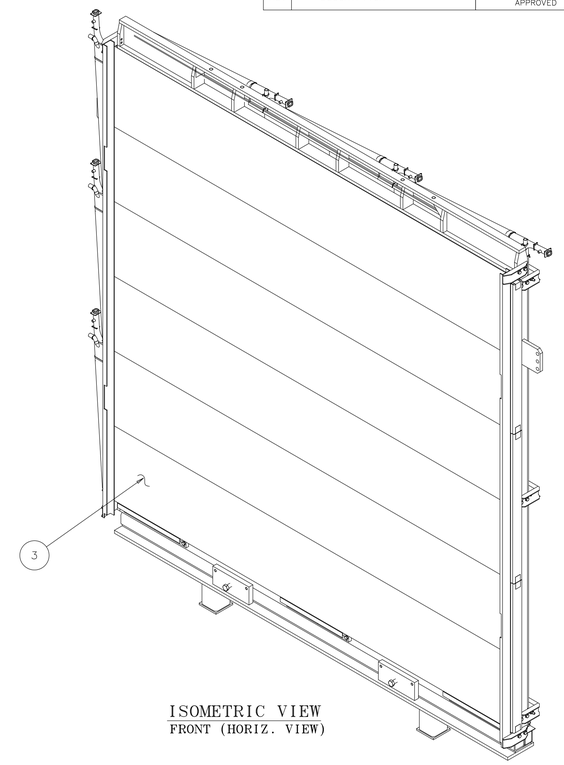

ISOMETRIC VIEW
FRONT (HORIZ. VIEW)

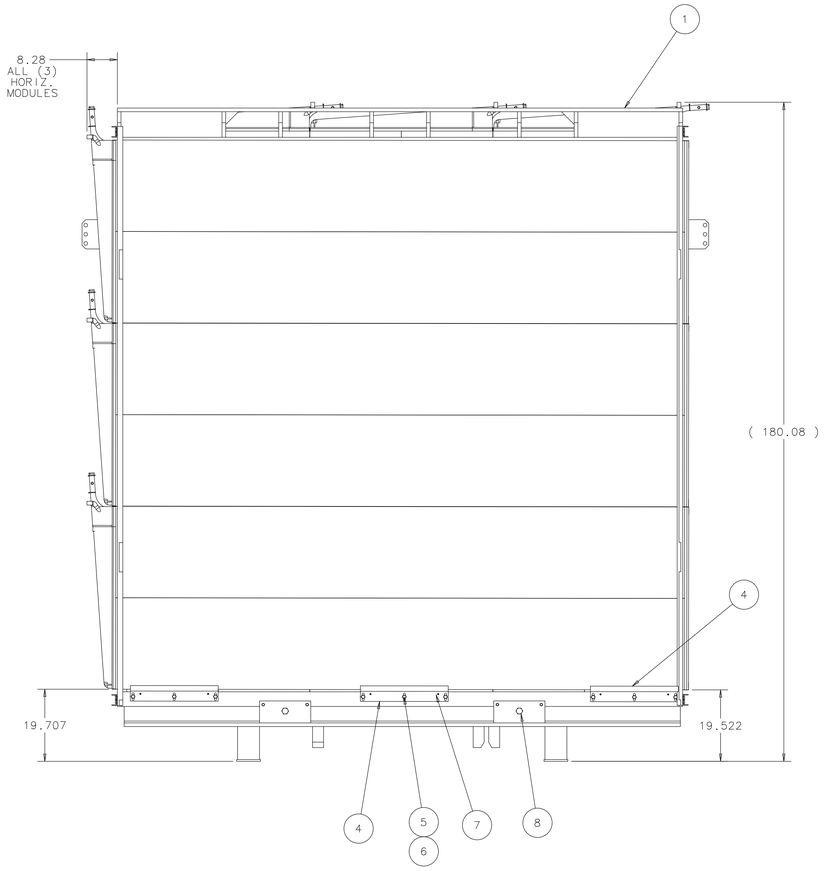

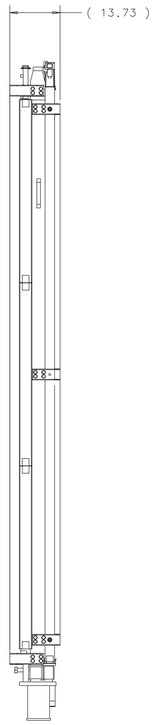

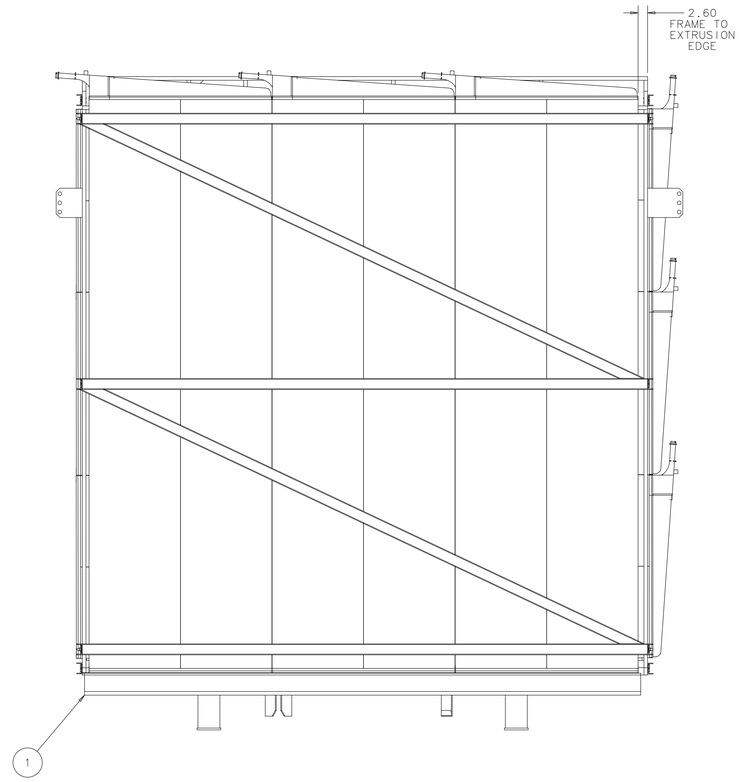

NOTES:
1. (1) VERTICAL AND (1) HORIZONTAL 32 CELL EXTRUSION REMOVED FOR CLARITY IN ISOMETRIC VIEWS.

WEIGHT = 4,300 LBS

ITEM	PART NO.	DESCRIPTION OR SIZE	QTY.
8	COML	HEX HD. SCREW - STEEL 1"-8 UNC-2A X 3.50 LG.	2
7	COML	ROLL PIN - STEEL Ø3/8 X .50 LG.	6
6	COML	FLAT WASHER - STEEL 1/2" SCREW SIZE	9
5	COML	HEX HD. SCREW - STEEL 1/2-13 UNC-2A X 1.75 LG.	9
4	MC-466836	CLIP BOTTOM VERTICAL	3
3	ME-493040	3 MODULE ND HORIZ. PLANE ASSY	1
2	ME-493041	3 MODULE ND VERT. PLANE ASSY	1
1	ME-493375	ND MINI BLOCK FRAME ASSY	1

PARTS LIST

UNLESS OTHERWISE SPECIFIED			ORIGINATOR	E.VILLEGAS	08-DEC-2012
.XX	.XXX	.XXXX	DRAWN	G.SMITH	08-DEC-2012
± ---	± ---	± ---	CHECKED	D.FRIEND	01-FEB-2013
			APPROVED	E.VILLEGAS	04-FEB-2013

1. BREAK ALL SHARP EDGES .015 MAX.
2. DO NOT SCALE DRAWING.
3. DIMENSIONS BASED UPON ASME Y14.5M-1994.
4. MAX. ALL MACH. SURFACES 125
5. DRAWING UNITS: U.S. INCH

USED ON

MATERIAL
SEE PARTS LIST ABOVE

FERMI NATIONAL ACCELERATOR LABORATORY
UNITED STATES DEPARTMENT OF ENERGY

NOVA-NEAR_DETECTOR
ND MINI BLOCK MODULES
ASSEMBLY

SCALE	DRAWING NUMBER	SHEET	REV
1:16	3929.330-ME-493195	1 OF 1	

CREATED WITH : Ideas12NXSeries | GROUP: PPD/MECHANICAL DEPARTMENT

NOTICE: IMAGE OBTAINED FROM FERMILAB
Computer Aided Design Group.
This image is an uncontrolled document and may not be the current, approved version.
This information is provided for REFERENCE use only. Not for MANUFACTURE, or DESIGN INFORMATION. All information contained in this document represents work sponsored by an agency of the U.S. Government. Neither the United States Government nor any agency thereof, nor Universities Research Associates, Inc., nor any of their employees or officers, makes any warranty, express or implied, or assumes any legal liability or responsibility for the accuracy, completeness, or usefulness of any information, apparatus, product, or process disclosed, or represents that its use would not infringe private(y owned rights.