REV	DESCRIPTION	DRAWN / APPROVED	DATE
A	ITEM 1 & 2 MODIFIED ITEM 6 WAS 6" HIGH NOW 4" CHANGED HOLE LOCATIONS IN VIEW A-A AND BACK VIEW 101.00" WAS 102.00" 37.00" WAS 36.00"	G SMITH	24-SEP-2012
		D FRIEND	27-SEP-2012
B	ITEM 1 & 2 ARE NEW DWGS. BOM COMPLETELY RE-DONE.	G SMITH	07-JAN-2013
		D FRIEND	01-FEB-2013

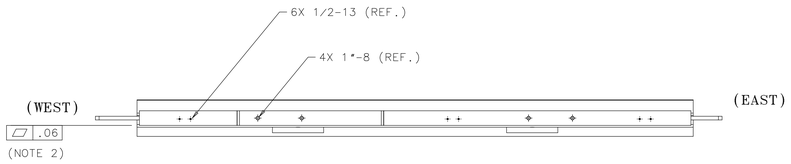

TOP VIEW

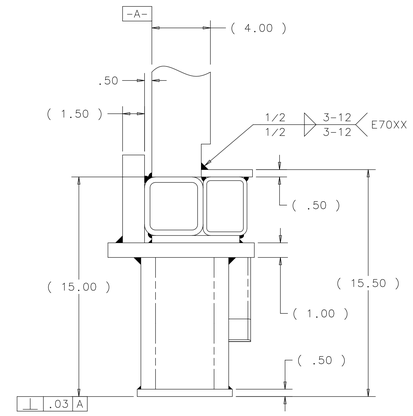

DETAIL B
SCALE : 1:4

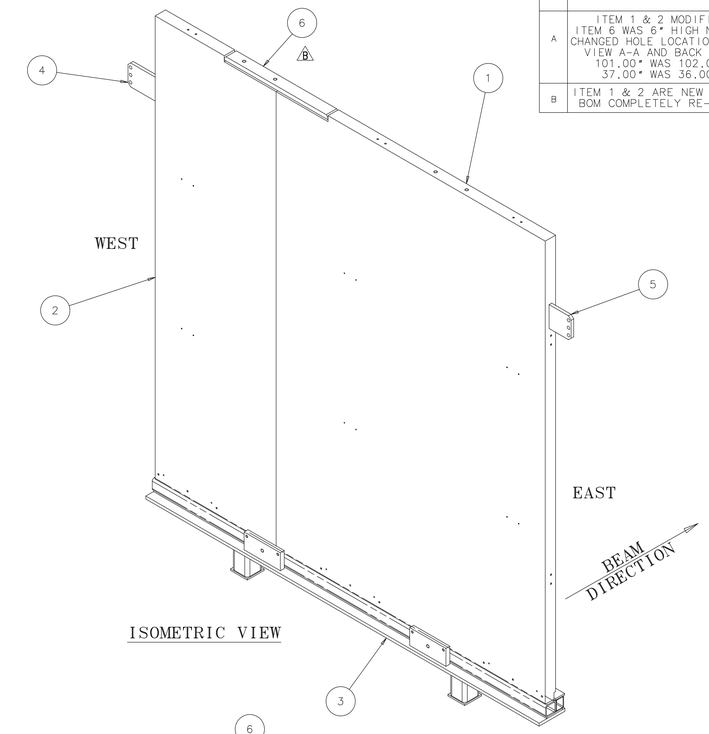

ISOMETRIC VIEW

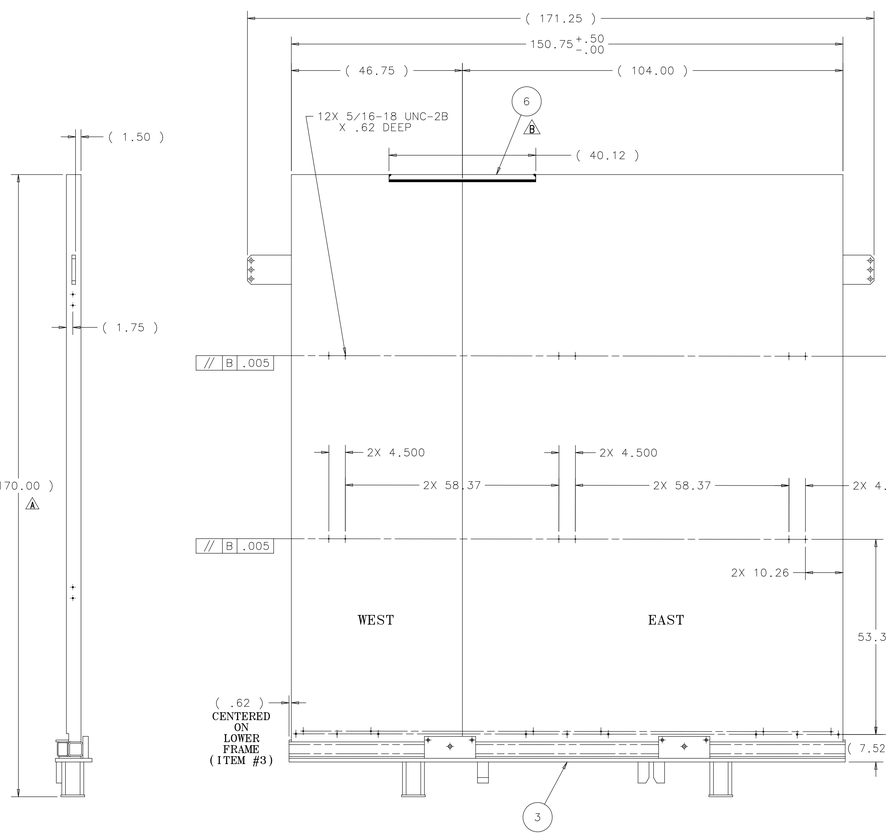

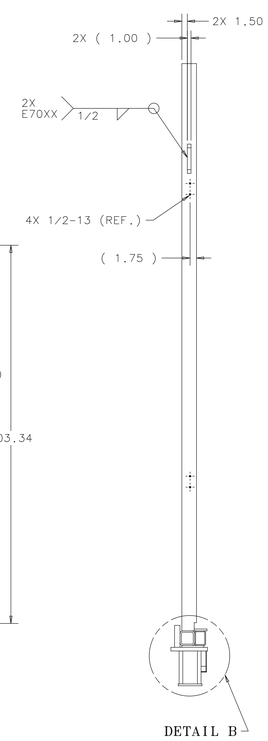

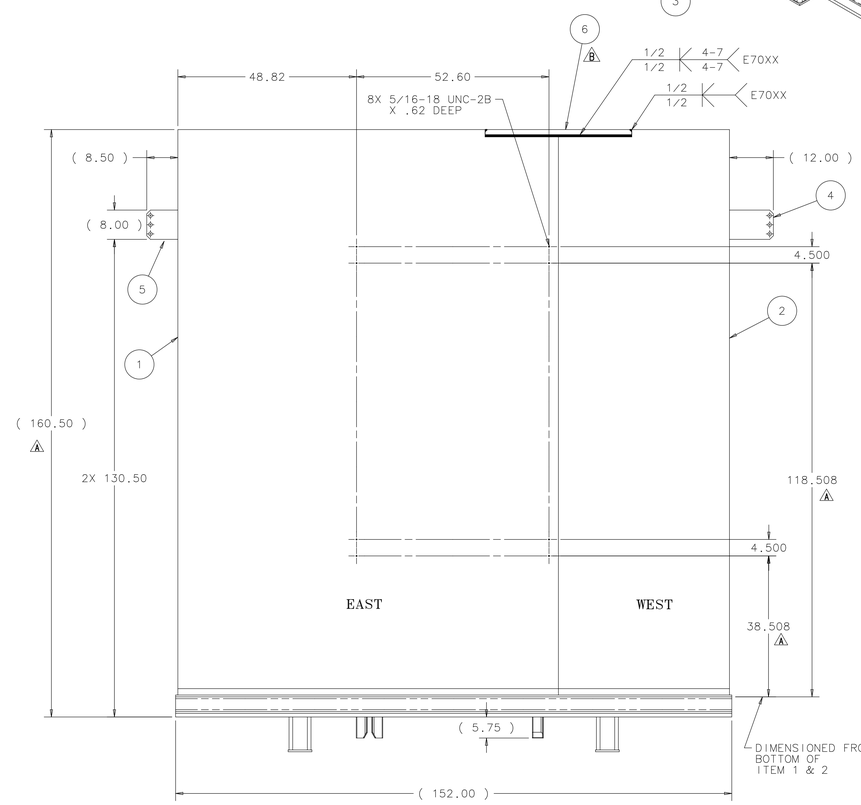

NOTES:

1. TOUCH-UP ALL WELD AND BURN MARKS WITH (2) COATS OF RED PRIMER PAINT.
2. NO MATERIAL SHALL BE REMOVED. FLATNESS TOLERANCE IS FOR ALIGNMENT OF ITEMS #1 & 2.

ESTIMATED WEIGHT = 27,598 LBS

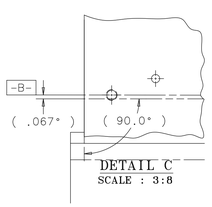

DETAIL C
SCALE : 3:8

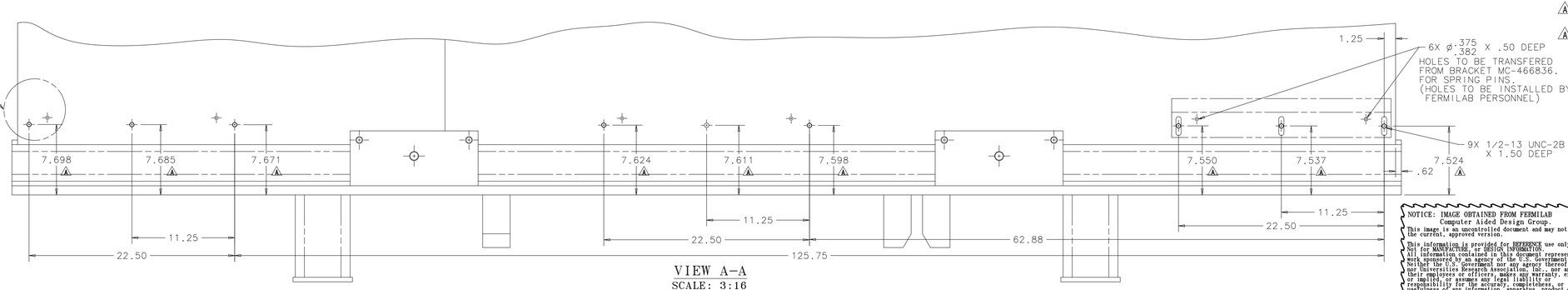

VIEW A-A
SCALE: 3:16

ITEM	PART NO.	DESCRIPTION OR SIZE	QTY.
6	MB-493302	TOP CONNECTION PLATE	1
5	MB-489909	STABILIZING RIGHT EAR	1
4	MB-489908	STABILIZING LEFT EAR	1
3	MD-493197	ND MINI FRAME LOWER WELDMENT	1
A B 2	ME-493293	MC WEST STEEL HALF PLATE 2	1
A B 1	ME-493292	MC EAST STEEL HALF PLATE 2	1

PARTS LIST

UNLESS OTHERWISE SPECIFIED					
.XX	.XXX	ANGLES	ORIGINATOR	E.VILLEGAS	13-AUG-2012
± .03	± .015	± ---	DRAWN	G.SMITH	13-AUG-2012
			CHECKED	D.FRIEND	31-AUG-2012
			APPROVED	E.VILLEGAS	31-AUG-2012

1. BREAK ALL SHARP EDGES .015 MAX.
2. DO NOT SCALE DRAWING.
3. DIMENSIONS BASED UPON ASME Y14.5M-1994
4. MAX. ALL MACH. SURFACES ---
5. DRAWING UNITS: U.S. INCH

USED ON

MATERIAL: SEE PARTS LIST ABOVE

FERMI NATIONAL ACCELERATOR LABORATORY
UNITED STATES DEPARTMENT OF ENERGY

NOVA-NEAR_DETECTOR
MUON CATCHER
ND MUON CATCHER WELDMENT

SCALE	DRAWING NUMBER	SHEET	REV
1:16 & AS NOTED	3929.330-ME-489903	1 OF 1	B

CREATED WITH : Ideas12NXSeries GROUP: PPD/MECHANICAL DEPARTMENT

NOTICE: IMAGE OBTAINED FROM FERMILAB
Computer Aided Design Group.
This image is an uncontrolled document and may not be the current, approved version.
This information is provided for REFERENCE use only. Not for MANUFACTURE or DESIGN INFORMATION. All information contained in this document represents work in progress and may be subject to change. Neither the U.S. Government nor any agency thereof, nor Universities Research Association, Inc., nor any of their employees or officers, makes any warranty, express or implied, or assumes any legal liability or responsibility for the accuracy, completeness, or usefulness of any information, apparatus, product, or process disclosed, or represents that its use would not infringe privately owned rights.