REV	DESCRIPTION	DRAWN	DATE
		APPROVED	DATE

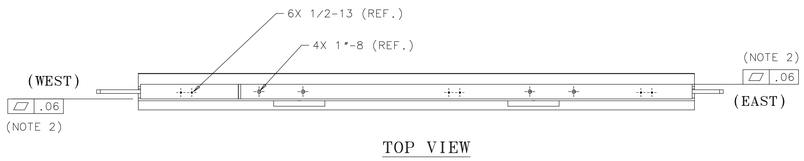

TOP VIEW

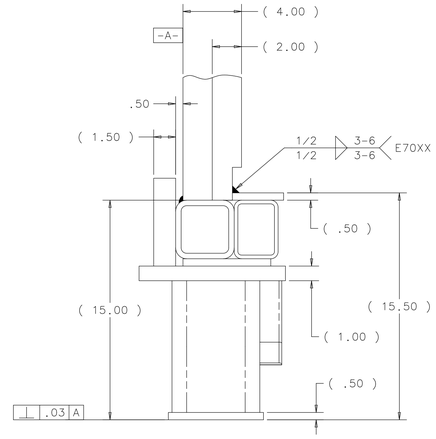

DETAIL B
SCALE : 1:4

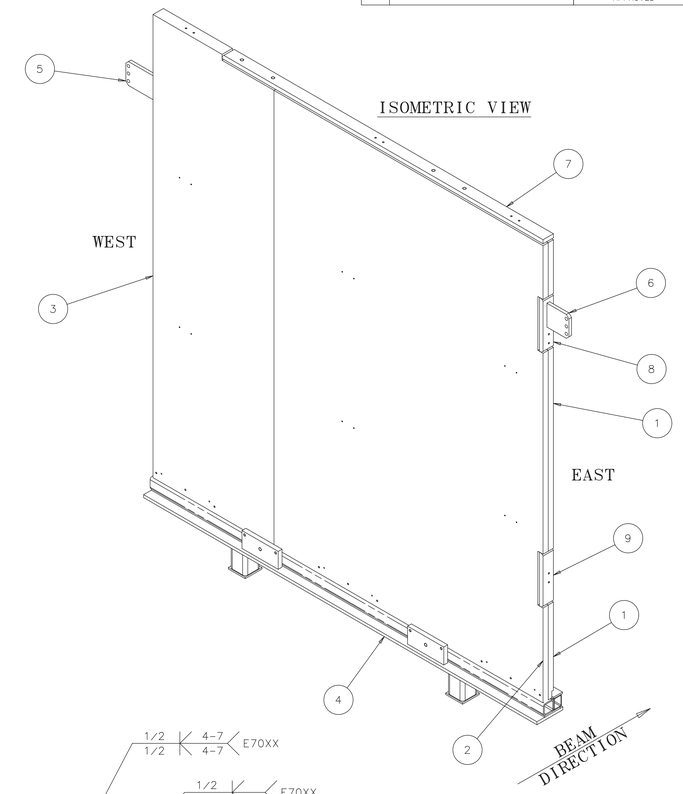

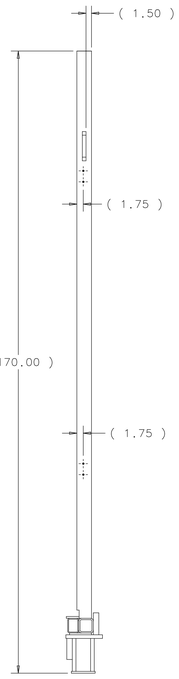

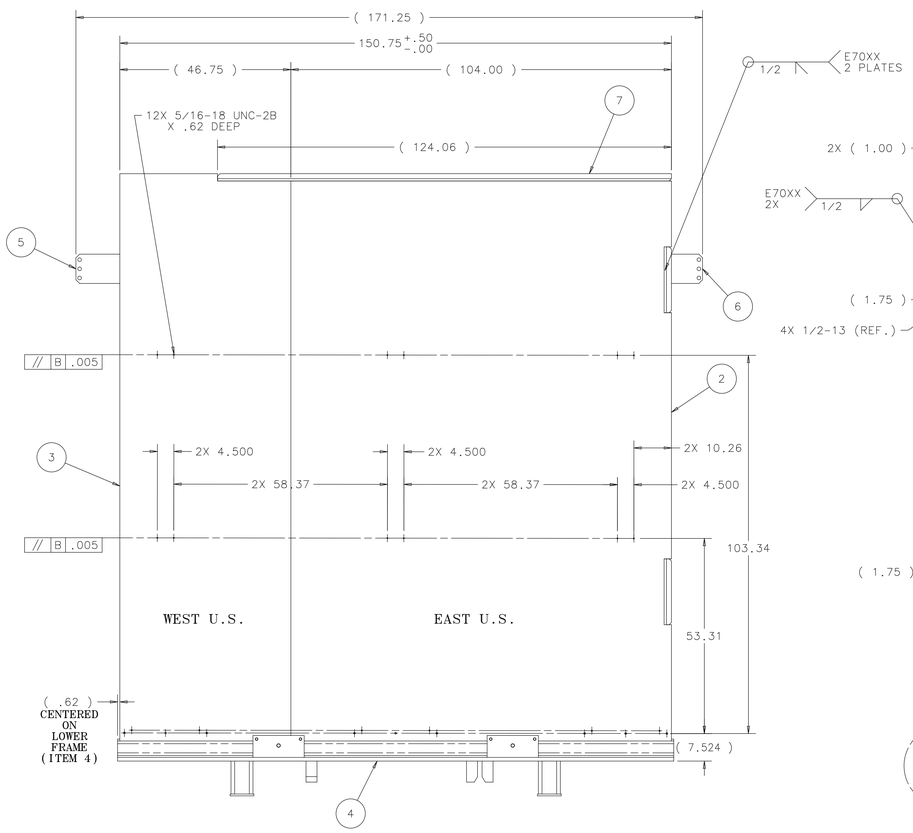

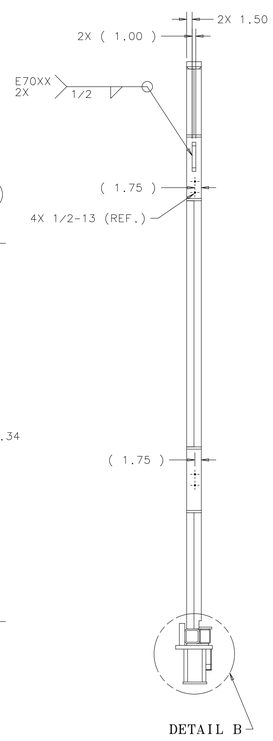

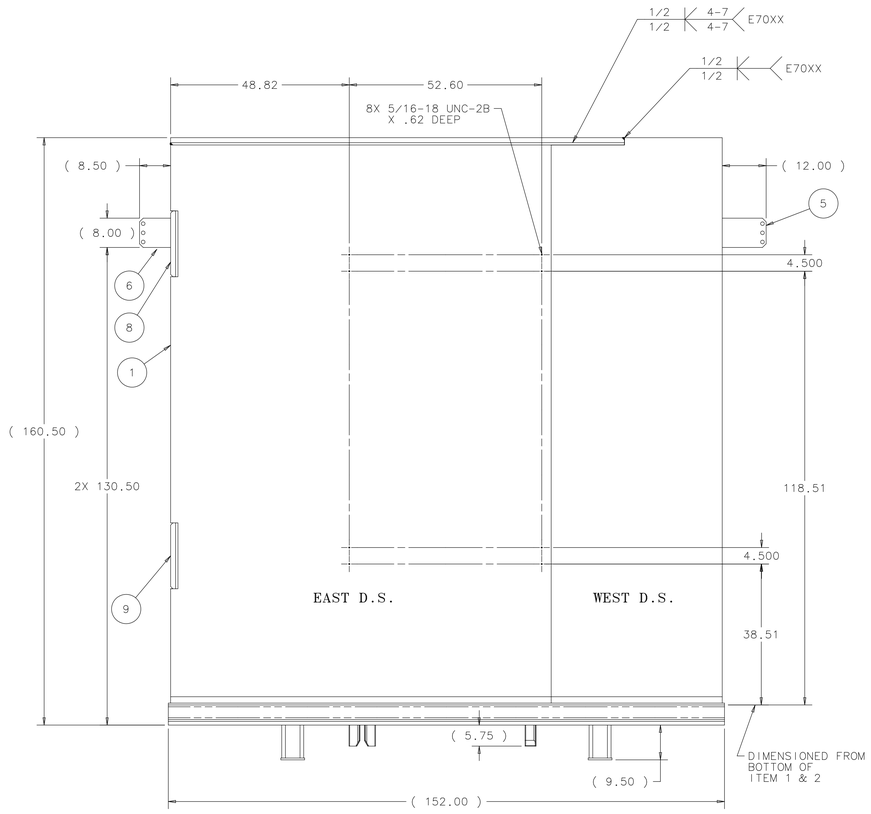

NOTES:

1. TOUCH-UP ALL WELD AND BURN MARKS WITH (2) COATS OF RED PRIMER PAINT.
2. NO MATERIAL SHALL BE REMOVED. FLATNESS TOLERANCE IS FOR ALIGNMENT OF ITEMS #1,2 & 3.

ESTIMATED WEIGHT = 27,584 LBS

ITEM	PART NO.	DESCRIPTION OR SIZE	QTY.
9	MB-493363	LOWER VERICAL CONNECTION PLATE	1
8	MB-493361	TOP VERTICAL CONNECTION PLATE	1
7	MC-493360	TOP CONNECTION SPECIAL PLATE	1
6	MB-489909	STABILIZING RIGHT EAR	1
5	MB-489908	STABILIZING LEFT EAR	1
4	MD-493197	ND MINI FRAME LOWER WELDMENT	1
3	ME-493293	MC WEST STEEL HALF PLATE 2	1
2	ME-493359	MC EAST U.S. STEEL HALF PLATE	1
1	ME-493358	MC EAST D.S. STEEL HALF PLATE	1

PARTS LIST

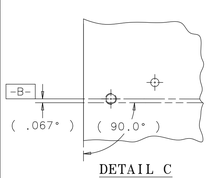

DETAIL C
SCALE : 3:8

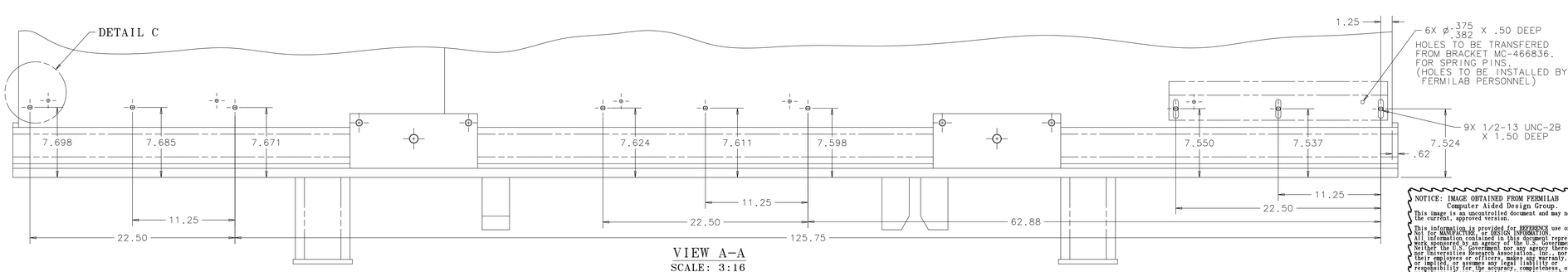

VIEW A-A
SCALE: 3:16

UNLESS OTHERWISE SPECIFIED			ORIGINATOR	E.VILLEGAS	18-JAN-2013
.XX	.XXX	ANGLES	DRAWN	G.SMITH	18-JAN-2013
± .03	± .015	± ---	CHECKED	D.FRIEND	01-FEB-2013
1. BREAK ALL SHARP EDGES .015 MAX			APPROVED	E.VILLEGAS	04-FEB-2013
2. DO NOT SCALE DRAWING. 3. DIMENSIONS BASED UPON ASME Y14.5M-1994 4. MAX. ALL MACH. SURFACES			USED ON		
5. DRAWING UNITS: U.S. INCH			MATERIAL	SEE PARTS LIST ABOVE	

FERMI NATIONAL ACCELERATOR LABORATORY
UNITED STATES DEPARTMENT OF ENERGY

NOVA-NEAR_DETECTOR
MUON CATCHER
ND SPECIAL MUON CATCHER WELDMENT

SCALE	DRAWING NUMBER	SHEET	REV
1:16 & AS NOTED	3929.330-ME-493351	1 OF 1	

CREATED WITH : Ideas12NXSeries GROUP: PPD/MECHANICAL DEPARTMENT

NOTICE: IMAGE OBTAINED FROM FERMILAB
Computer Aided Design Group.

This image is an uncontrolled document and may not be the current, approved version.

This information is provided for REFERENCE use only. Not for MANUFACTURE, or DESIGN INFORMATION. All information contained in this document represents work sponsored by an agency of the U.S. Government. Neither the United States Government, Fermi Research Alliance, LLC, Universities Research Association, Inc., nor any of their employees or officers, makes any warranty, express or implied, or assumes any legal liability or responsibility for the accuracy, completeness, or usefulness of any information, apparatus, product, or process disclosed, or represents that its use would not infringe privately owned rights.