REV	DESCRIPTION	DRAWN / APPROVED	DATE
A	ITEM 1 & 2 MODIFIED ITEM 6 WAS 6" HIGH NOW 4" CHANGED HOLE LOCATIONS IN VIEW A-A AND BACK VIEW	G SMITH	24-SEP-2012
		D FRIEND	27-SEP-2012
B	ITEMS 1 & 2 ARE NEW DWGS BOM COMPLETELY RE-DONE	G SMITH	07-JAN-2013

TOP VIEW

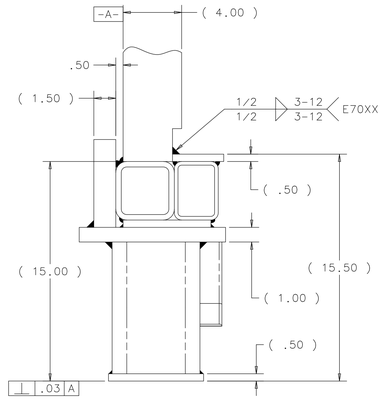

DETAIL B
SCALE : 1:4

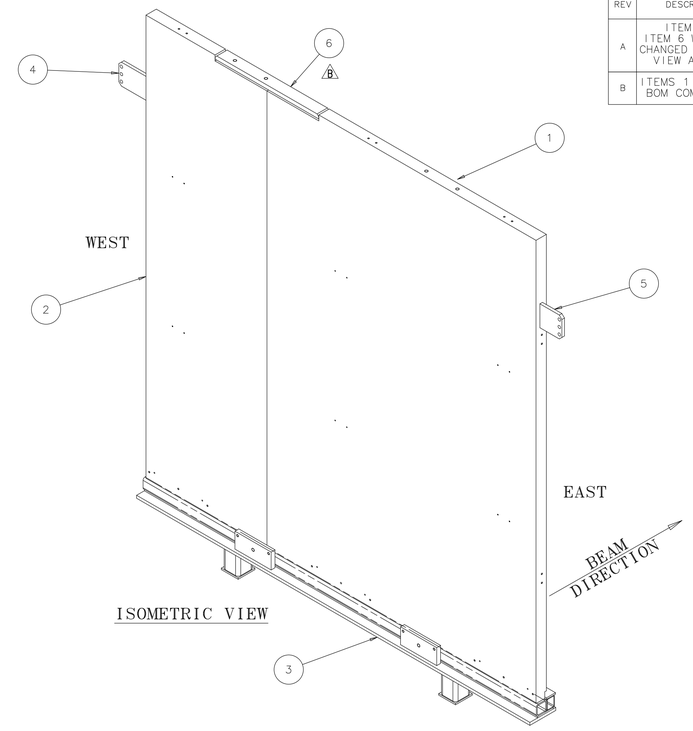

ISOMETRIC VIEW

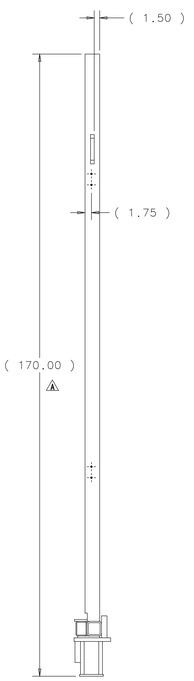

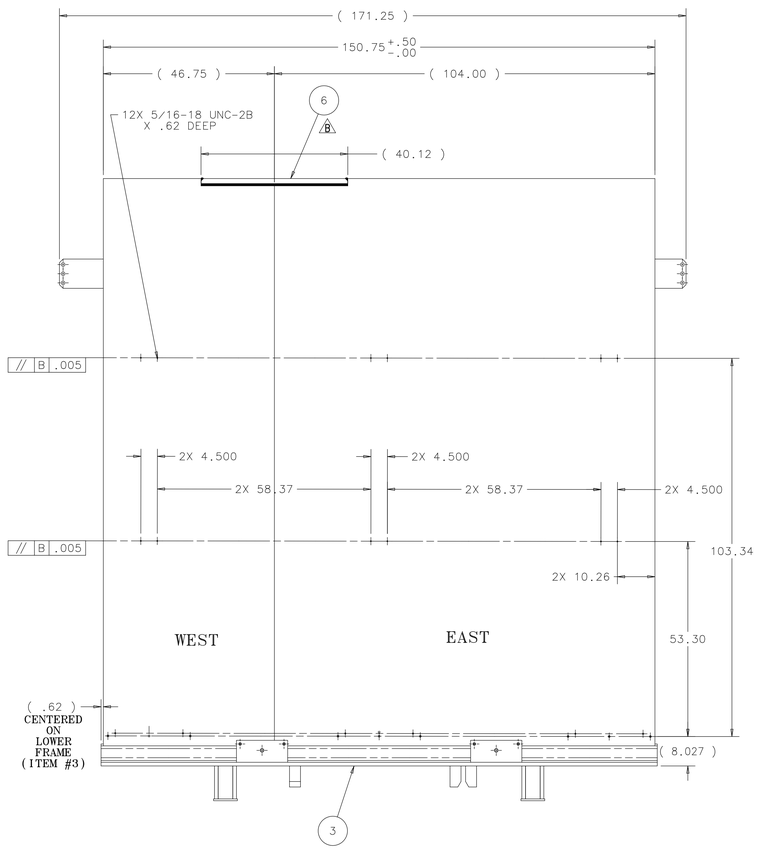

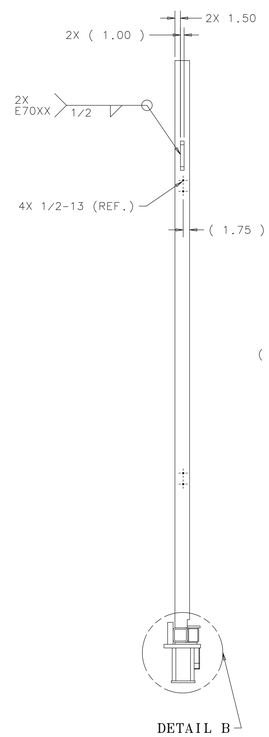

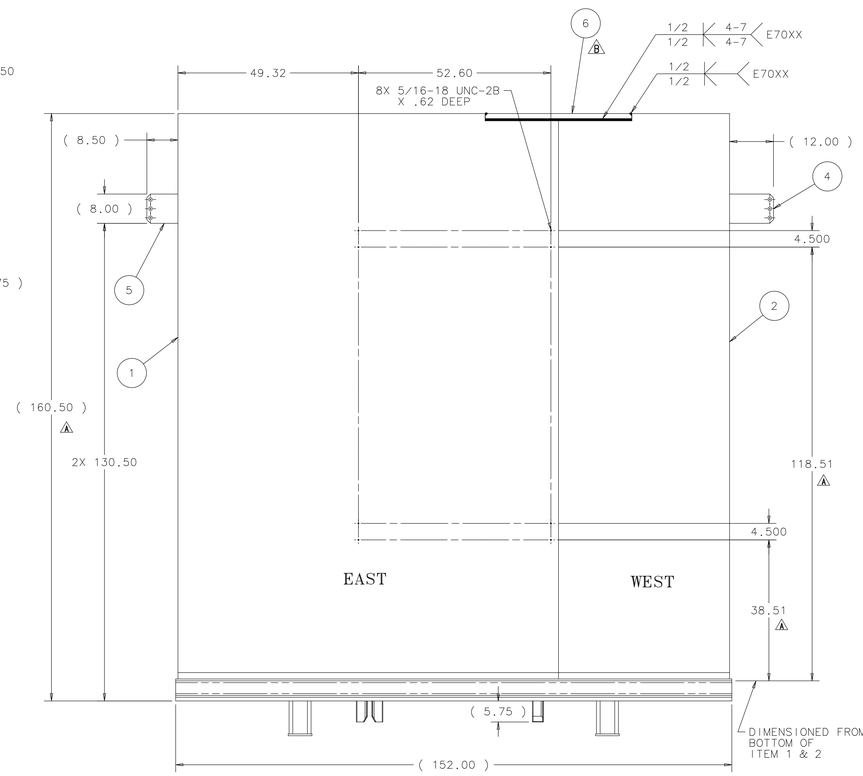

NOTES:

1. TOUCH-UP ALL WELD AND BURN MARKS WITH (2) COATS OF RED PRIMER PAINT.
2. NO MATERIAL SHALL BE REMOVED. FLATNESS TOLERANCE IS FOR ALIGNMENT OF ITEMS #1 & 2.

ESTIMATED WEIGHT = 27,598 LBS

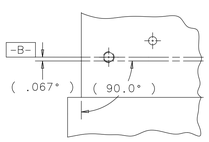

DETAIL C
SCALE : 3:8

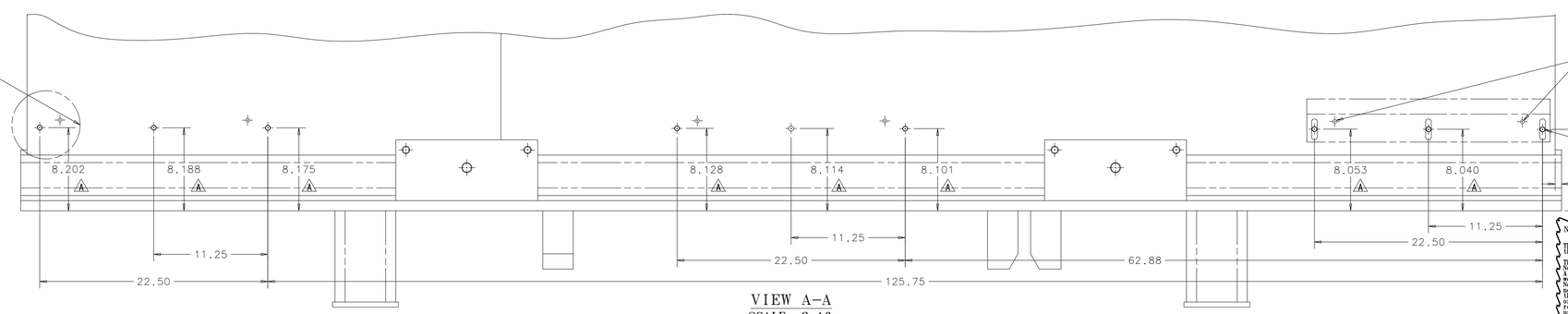

VIEW A-A
SCALE: 3:16

NOTICE: IMAGE OBTAINED FROM FERMILAB
Computer Aided Design Group.
This image is an uncontrolled document and may not be the current, approved version.

This information is provided for REFERENCE use only. Not for MANUFACTURE, or DESIGN INFORMATION. All information contained in this document represents work sponsored by an agency of the U.S. Government. Neither the U.S. Government nor any agency thereof, nor Universities Research Association, Inc., nor any of their employees or officers, makes any warranty, express or implied, or assumes any legal liability or responsibility for the accuracy, completeness, or usefulness of any information, apparatus, product or process disclosed, or represents that its use would not infringe privately owned rights.

ITEM	PART NO.	DESCRIPTION OR SIZE	QTY.
6	MB-493302	TOP CONNECTION PLATE	1
5	MB-489909	STABILIZING RIGHT EAR	1
4	MB-489908	STABILIZING LEFT EAR	1
3	MD-493197	ND MINI FRAME LOWER WELDMENT	1
2	ME-493293	MC WEST STEEL HALF PLATE 2	1
1	ME-493292	MC EAST STEEL HALF PLATE 2	1

PARTS LIST

UNLESS OTHERWISE SPECIFIED					
.XX	.XXX	ANGLES	ORIGINATOR	E.VILLEGAS	23-AUG-2012
± .03	± .015	± ---	DRAWN	G.SMITH	23-AUG-2012
			CHECKED	D.FRIEND	31-AUG-2012
			APPROVED	E.VILLEGAS	31-AUG-2012

1. BREAK ALL SHARP EDGES .015 MAX.
2. DO NOT SCALE DRAWING.
3. DIMENSIONS BASED UPON ASME Y14.5M-1994
4. MAX. ALL MACH. SURFACES
5. DRAWING UNITS: U.S. INCH

USED ON

MATERIAL: SEE PARTS LIST ABOVE

FERMI NATIONAL ACCELERATOR LABORATORY
UNITED STATES DEPARTMENT OF ENERGY

NOVA-NEAR_DETECTOR
MUON CATCHER
ND STAGGARD MUON CATCHER WLDMNT

SCALE	DRAWING NUMBER	SHEET	REV
1:16 & AS NOTED	3929.330-ME-489923	1 OF 1	B

CREATED WITH : Ideas12NXSeries | GROUP: PPD/MECHANICAL DEPARTMENT