REV	DESCRIPTION	DRAWN	DATE
		APPROVED	DATE

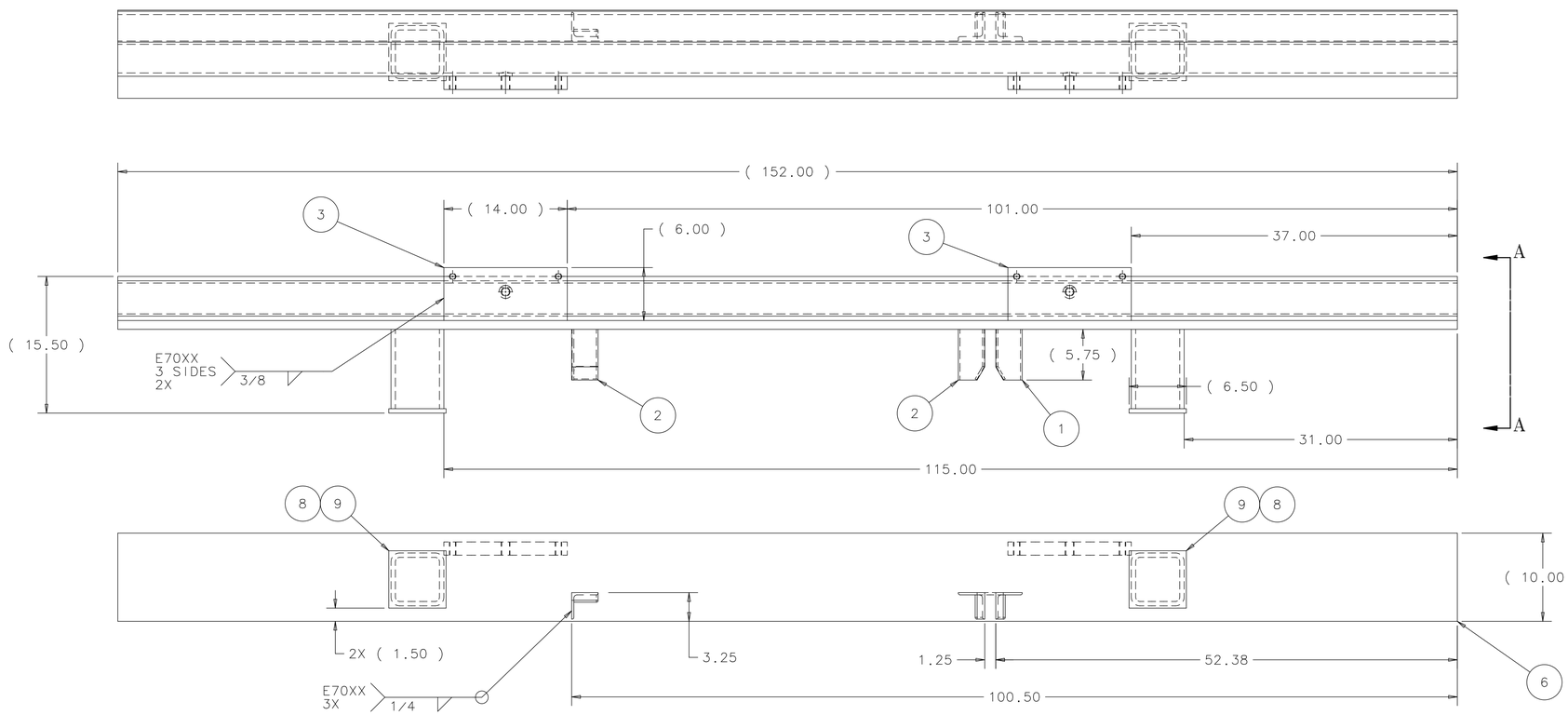

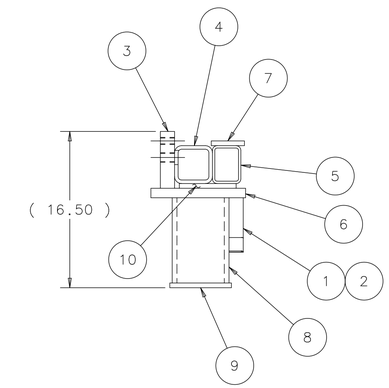

WEIGHT = 431 LBS

ITEM	PART NO.	DESCRIPTION OR SIZE	QTY.
10	COML	STEEL BAR -ASTM A36 1/2 X 6.00 X 152.00 LG.	1
9	COML	STEEL BAR -ASTM A36 1/2 X 6.50 X 6.50 LG.	2
8	COML	STRUCTURAL STEEL TUBING-RETANGULAR 6 X 6 X 1/2 WALL X 9.00 LG. ASTM A500 GR. B	2
7	COML	STEEL BAR -ASTM A36 1/2 X 3.50 X 152.00 LG.	1
6	COML	STEEL BAR -ASTM A36 1 X 10 X 152.00 LG.	1
5	COML	STRUCTURAL STEEL TUBING-RETANGULAR 4 X 3 X 1/4 WALL X 152.00 LG. ASTM A500 GR. B	1
4	COML	STRUCTURAL STEEL TUBING-RETANGULAR 4 X 4 X 1/4 WALL X 152.00 LG. ASTM A500 GR. B	1
3	MB-489906	STOP BLOCK	2
2	MB-489925	L3 X 3 X .25 X 5.57 LG-LEFT	2
1	MB-489926	L3 X 3 X .25 X 5.57 LG-RIGHT	1

PARTS LIST

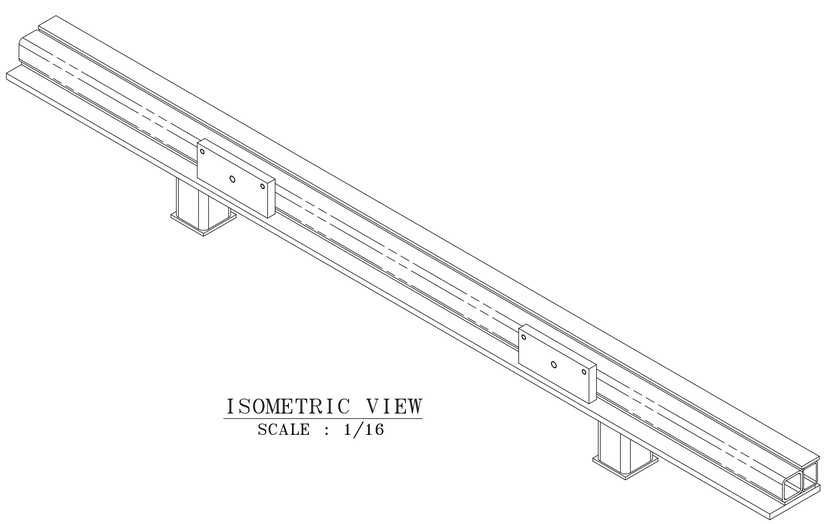

ISOMETRIC VIEW
SCALE : 1/16

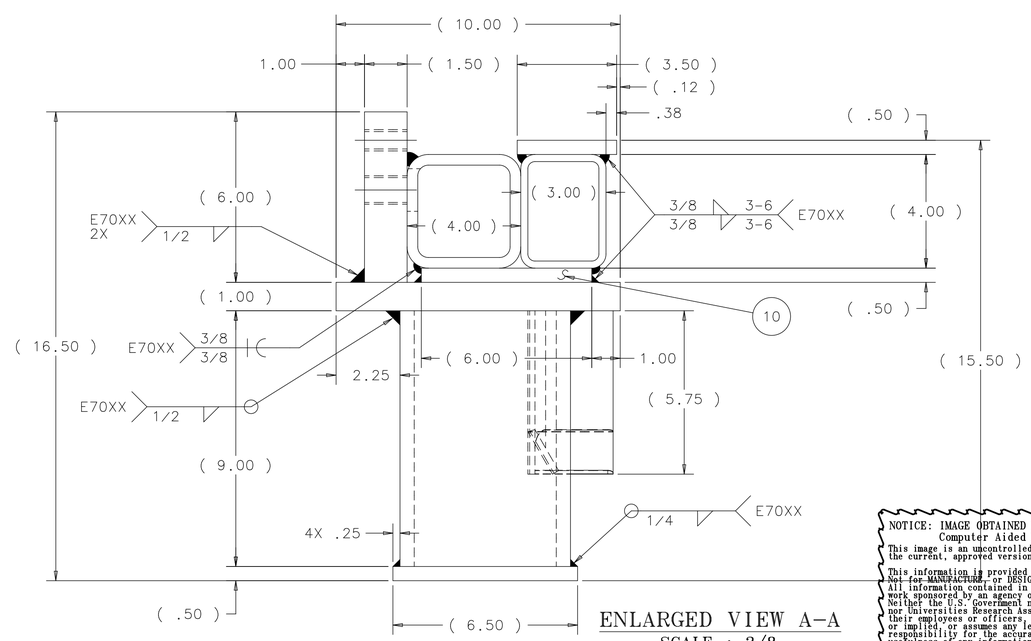

ENLARGED VIEW A-A
SCALE : 3/8

NOTICE: IMAGE OBTAINED FROM FERMILAB
Computer Aided Design Group.
This image is an uncontrolled document and may not be the current, approved version.
This information is provided for REFERENCE use only. Not for MANUFACTURE or DESIGN INFORMATION. All information contained in this document represents work sponsored by an agency of the U.S. Government. Neither the U.S. Government nor any agency thereof, nor Universities Research Association, Inc., nor any of their employees or officers, makes any warranty, express or implied, or assumes any legal liability or responsibility for the accuracy, completeness, or usefulness of any information, apparatus, product or process disclosed, or represents that its use would not infringe privately owned rights.

PARTS LIST

UNLESS OTHERWISE SPECIFIED			ORIGINATOR	E.VILLEGAS	30-NOV-2012
.XX	.XXX	ANGLES	DRAWN	G.SMITH	30-NOV-2012
± .03	± ---	± ---	CHECKED	D.FRIEND	01-FEB-2013
			APPROVED	E.VILLEGAS	04-FEB-2013

1. BREAK ALL SHARP EDGES .015 MAX.
2. DO NOT SCALE DRAWING.
3. DIMENSIONS BASED UPON ASME Y14.5M-1994
4. MAX. ALL MACH. SURFACES
5. DRAWING UNITS: U.S. INCH

USED ON
ME-493375 ; ME-489903
ME-489923 ; ME-493351

MATERIAL
SEE PARTS LIST ABOVE

FERMI NATIONAL ACCELERATOR LABORATORY
UNITED STATES DEPARTMENT OF ENERGY

NOVA-NEAR_DETECTOR
ND MINI BLOCK MODULES
ND MINI FRAME LOWER WELDMENT

SCALE	DRAWING NUMBER	SHEET	REV
1:8 & AS NOTED	3929.330-MD-493197	1 OF 1	

CREATED WITH : Ideas12NXSeries | GROUP: PPD/MECHANICAL DEPARTMENT