REV	DESCRIPTION	DRAWN	DATE
		APPROVED	DATE

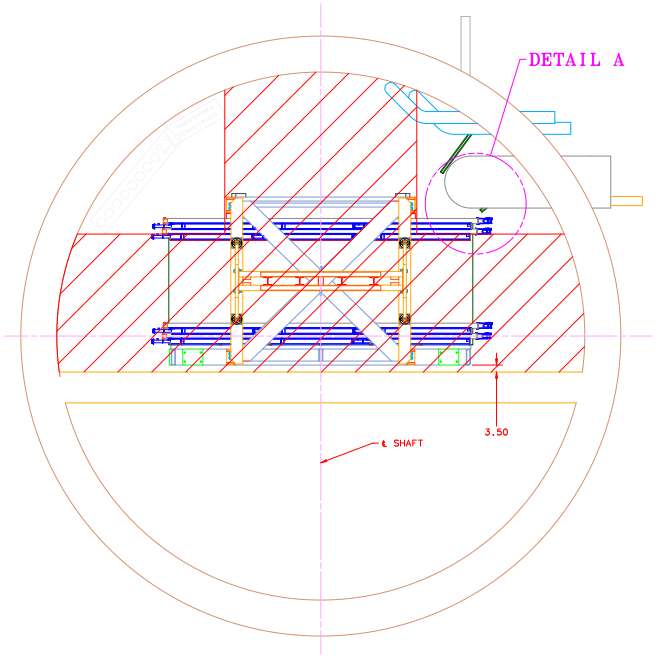

PLAN VIEW
MINOS SHAFT – AT MSB
SCALE: 1/2"=1'-0"

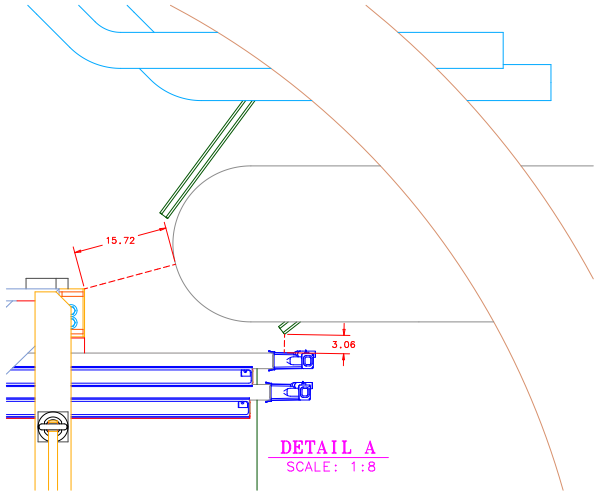

DETAIL A
SCALE: 1:8

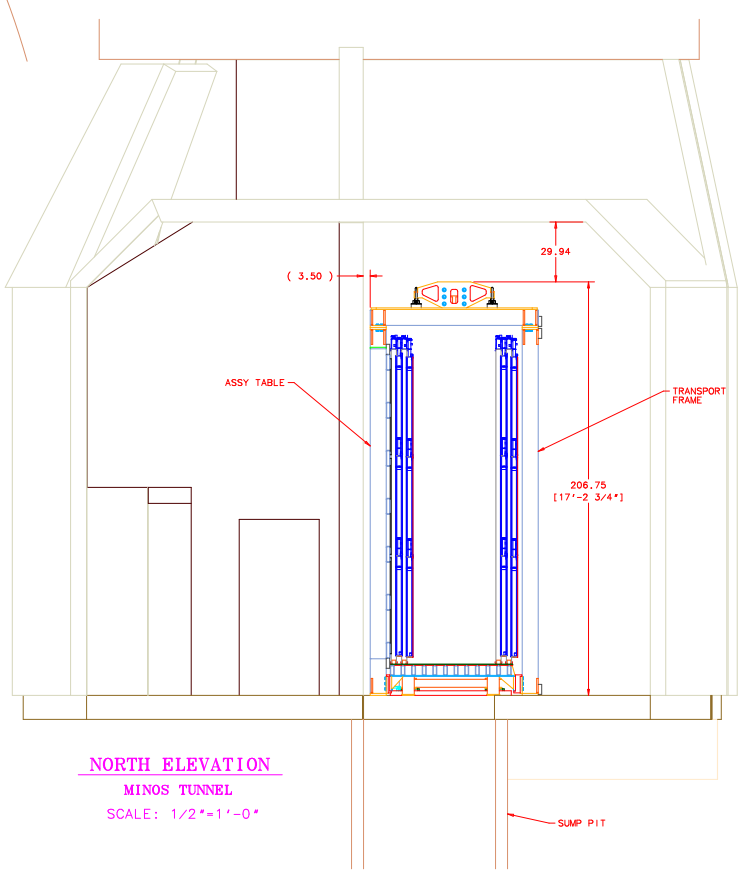

NORTH ELEVATION
MINOS TUNNEL
SCALE: 1/2"=1'-0"

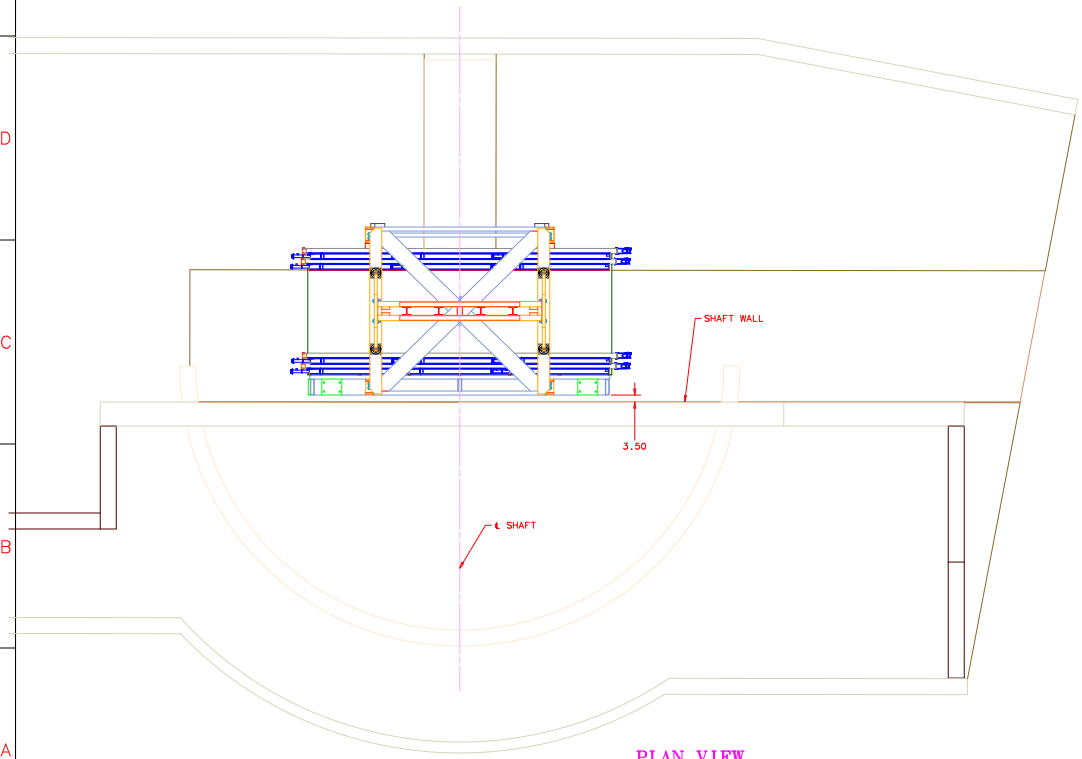

PLAN VIEW
MINOS SHAFT – AT MINOS TUNNEL
SCALE: 1/2"=1'-0"

NOTES:

1. CONFIGURATION #2; THIS CONFIGURATION HAS THE ASSEMBLY TABLE AGAINST THE SHAFT WALL. ONCE THE 24 PLANE BLOCK ASSY HAS BEEN LOWERED INTO THE MINOS TUNNEL, ROTATE THE BLOCK ASSY 90° CCW AND SET UPON THE TUNNEL TRANSPORT CART FRAME REMOVE THE ASSEMBLY TABLE AND THE TRANSPORT FRAME. THE BLOCK ASSY IS NOW READY FOR MOVEMENT DOWN THE MINOS TUNNEL TO THE NOVA CAVERN.

UNLESS OTHERWISE SPECIFIED			ORIGINATOR	E.VILLEGAS	28-DEC-2012
.XX	.XXX	ANGLES	DRAWN	D.FRIEND	28-DEC-2012
± ---	± ---	± ---	CHECKED		
1. BREAK ALL SHARP EDGES .1MAX			APPROVED		
2. DO NOT SCALE DRAWING. 3. DIMENSIONS BASED UPON ASME Y14.5M-1994 4. MAX. ALL MACH. SURFACES			USED ON		
			MATERIAL		
5. DRAWING UNITS: U.S. INCH					

FERMI NATIONAL ACCELERATOR LABORATORY
UNITED STATES DEPARTMENT OF ENERGY

NOVA-INSTALLATION_&_ENG_SPECS
MINOS SHAFT & TUNNEL
ND BLOCK ASSY CLEARANCES

SCALE	DRAWING NUMBER	SHEET	REV
AS NOTED	3929.330-ME-493232	2 OF 2	

CREATED WITH : Ideas12NXSeries GROUP: PPD/MECHANICAL DEPARTMENT