REV	DESCRIPTION	DRAWN	DATE
		APPROVED	DATE

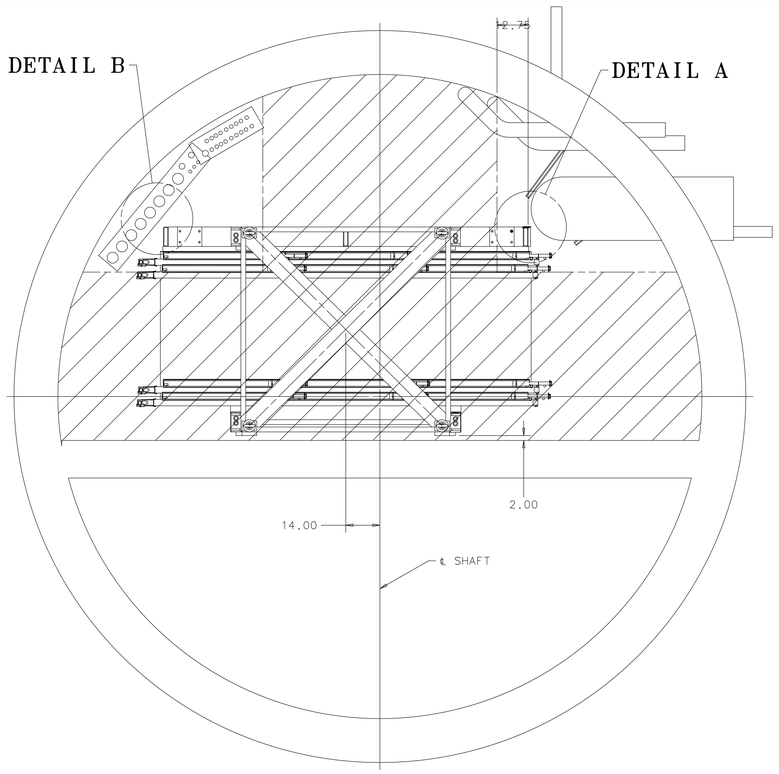

PLAN VIEW

MINOS SHAFT – AT MSB

SCALE: 1/2"=1'-0"

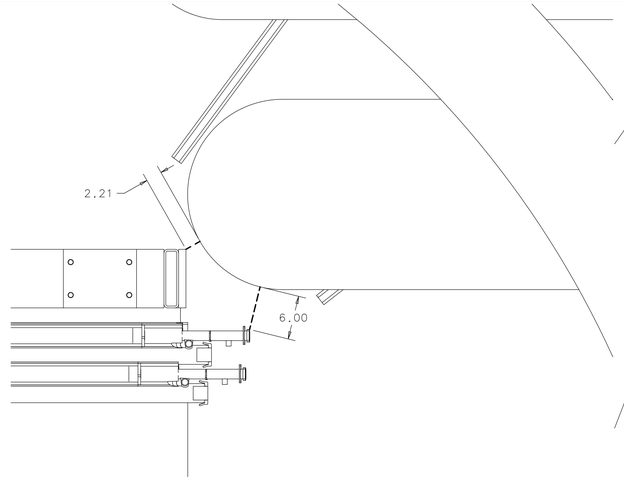

DETAIL A

SCALE: 1:8

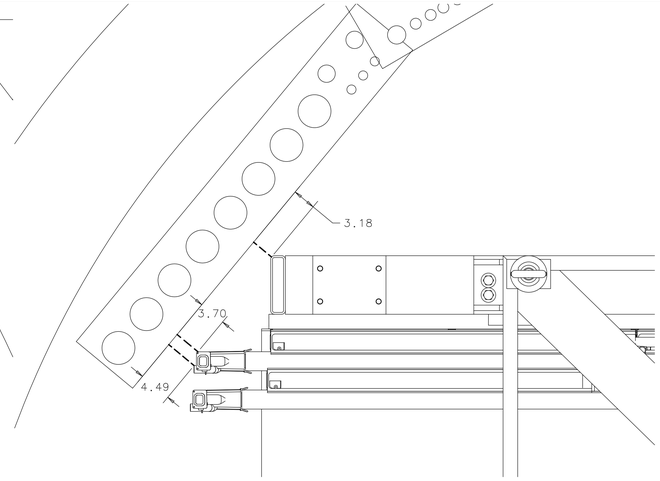

DETAIL B

SCALE: 1:8

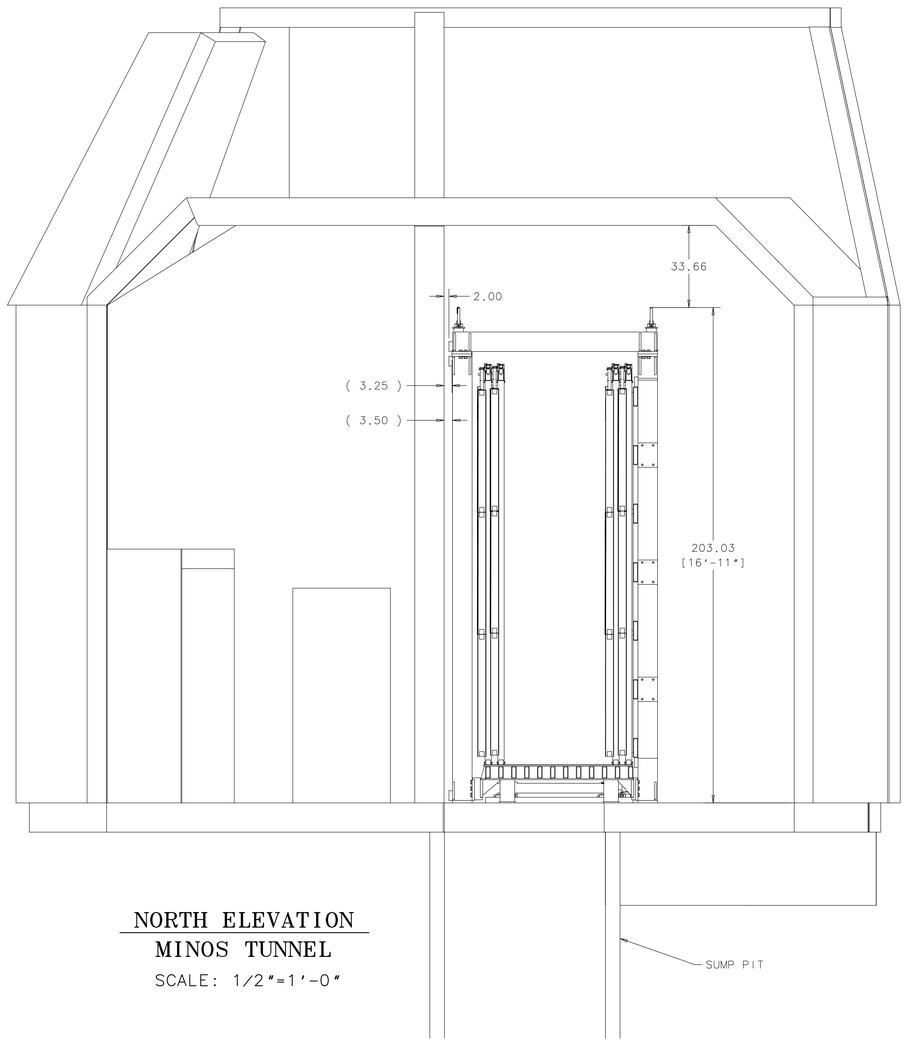

NORTH ELEVATION

MINOS TUNNEL

SCALE: 1/2"=1'-0"

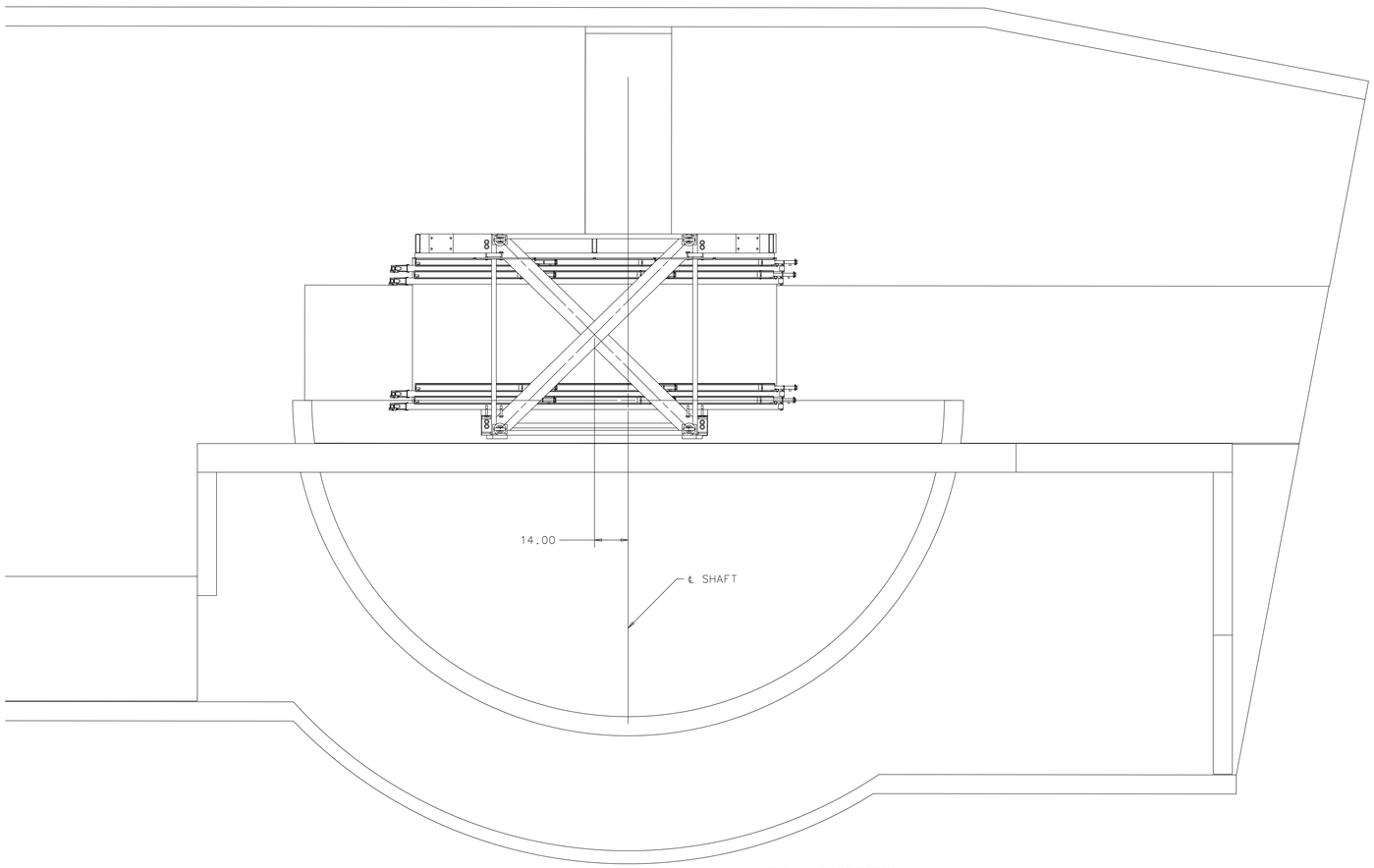

PLAN VIEW

MINOS SHAFT – AT MINOS TUNNEL

SCALE: 1/2"=1'-0"

UNLESS OTHERWISE SPECIFIED			ORIGINATOR	E.VILLEGAS 28-DEC-2012
.XX	.XXX	ANGLES	DRAWN	D.FRIEND 28-DEC-2012
± ---	± ---	± ---	CHECKED	
			APPROVED	

1. BREAK ALL SHARP EDGES MAX.
2. DO NOT SCALE DRAWING.
3. DIMENSIONS BASED UPON ASME Y14.5M-1994
4. MAX. ALL MACH. SURFACES √
5. DRAWING UNITS: U.S. INCH

USED ON

MATERIAL

FERMI NATIONAL ACCELERATOR LABORATORY
UNITED STATES DEPARTMENT OF ENERGY

NOVA-INSTALLATION_&_ENG_SPECS
MINOS SHAFT & TUNNEL
ND BLOCK ASSY CLEARANCES

SCALE	DRAWING NUMBER	SHEET	REV
AS NOTED	3929.330-ME-493232	1 OF 1	

CREATED WITH : Ideas12NXSeries GROUP: PPD/MECHANICAL DEPARTMENT