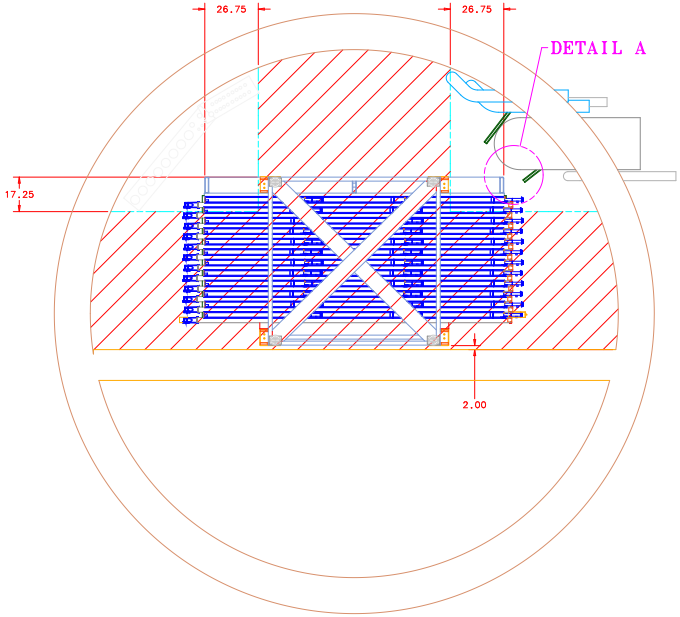

PLAN VIEW
MINOS SHAFT – AT MSB
SCALE: 1/2"=1'-0"

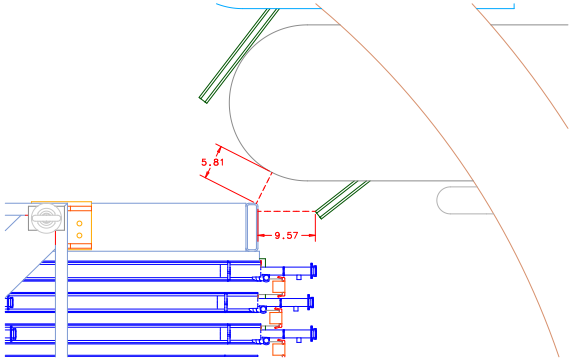

DETAIL A
SCALE: 1:8

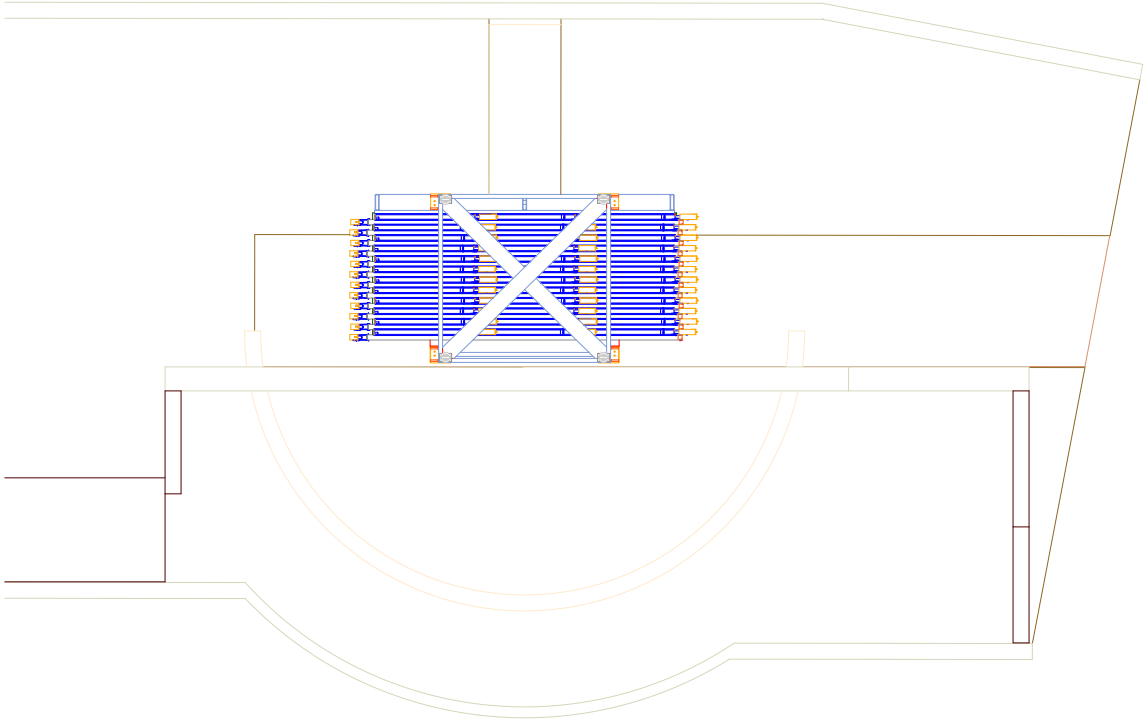

PLAN VIEW
MINOS SHAFT – AT MINOS TUNNEL
SCALE: 1/2"=1'-0"

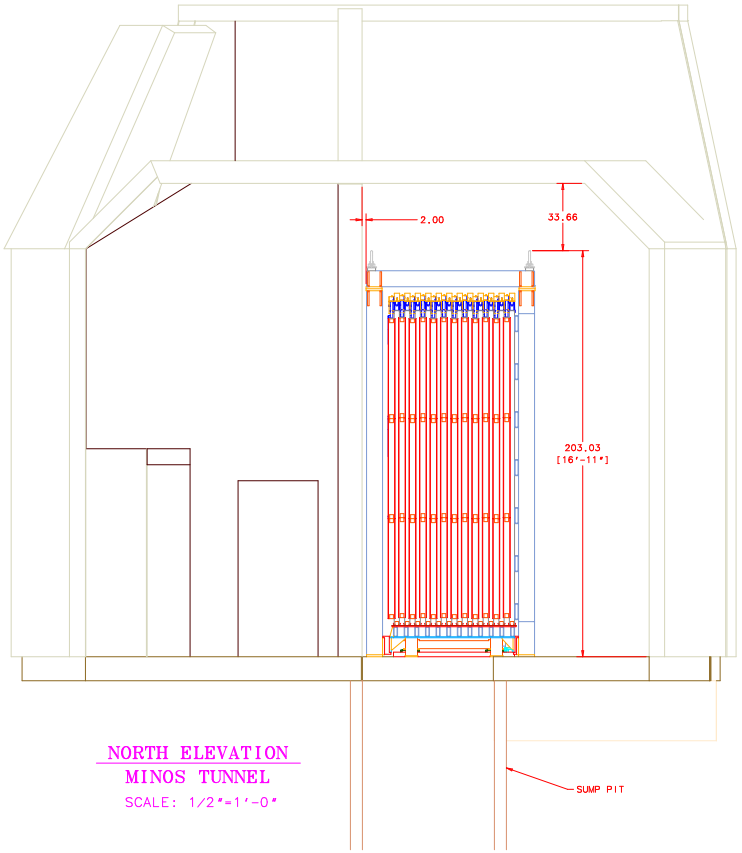

NORTH ELEVATION
MINOS TUNNEL
SCALE: 1/2"=1'-0"

REV	DESCRIPTION	DRAWN	DATE
		APPROVED	DATE

UNLESS OTHERWISE SPECIFIED			ORIGINATOR	E.VILLEGAS	18-DEC-2012
.XX	.XXX	ANGLES	DRAWN	D.FRIEND	18-DEC-2012
± ---	± ---	± ---	CHECKED		
1. BREAK ALL SHARP EDGES MAX.			APPROVED		
2. DO NOT SCALE DRAWING.			USED ON		
3. DIMENSIONS BASED UPON ASME Y14.5M-1994					
4. MAX. ALL MACH. SURFACES			MATERIAL		
5. DRAWING UNITS:U.S.INCH					

FERMI NATIONAL ACCELERATOR LABORATORY
UNITED STATES DEPARTMENT OF ENERGY

NOVA-INSTALLATION_&_ENG_SPECS
MINOS SHAFT & TUNNEL
ND BLOCK ASSY CLEARANCES

SCALE	DRAWING NUMBER	SHEET	REV
AS NOTED	3929.330-ME-493232	1 OF 1	

CREATED WITH : Ideas12NXSeries GROUP: PPD/MECHANICAL DEPARTMENT