REV	DESCRIPTION	DRAWN	DATE
		APPROVED	DATE

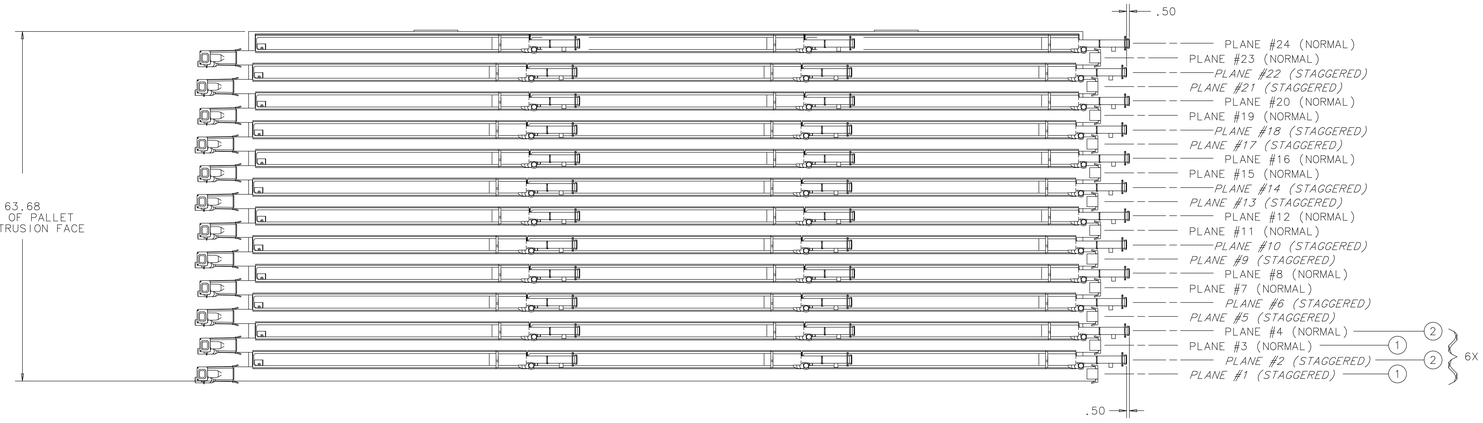

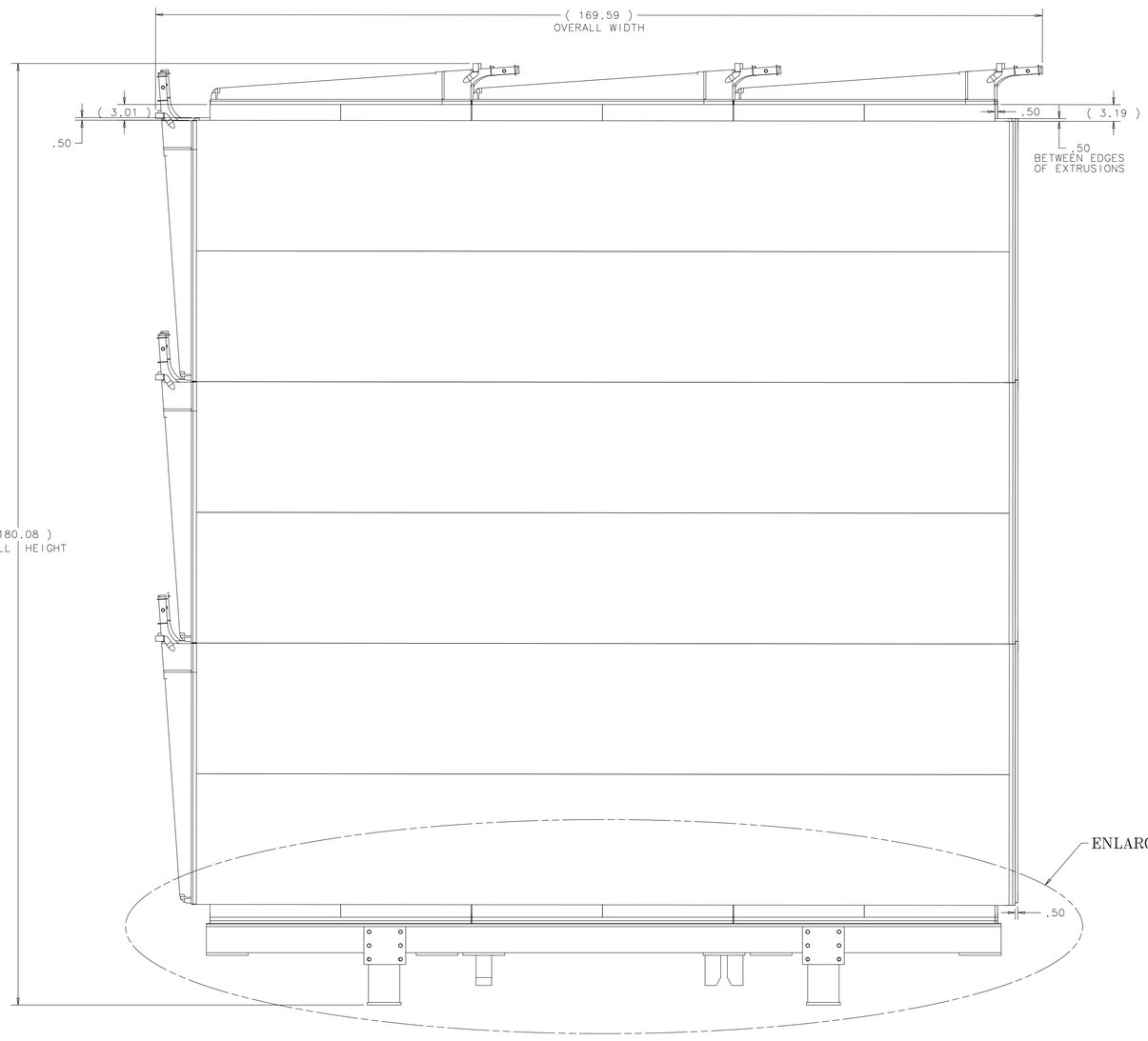

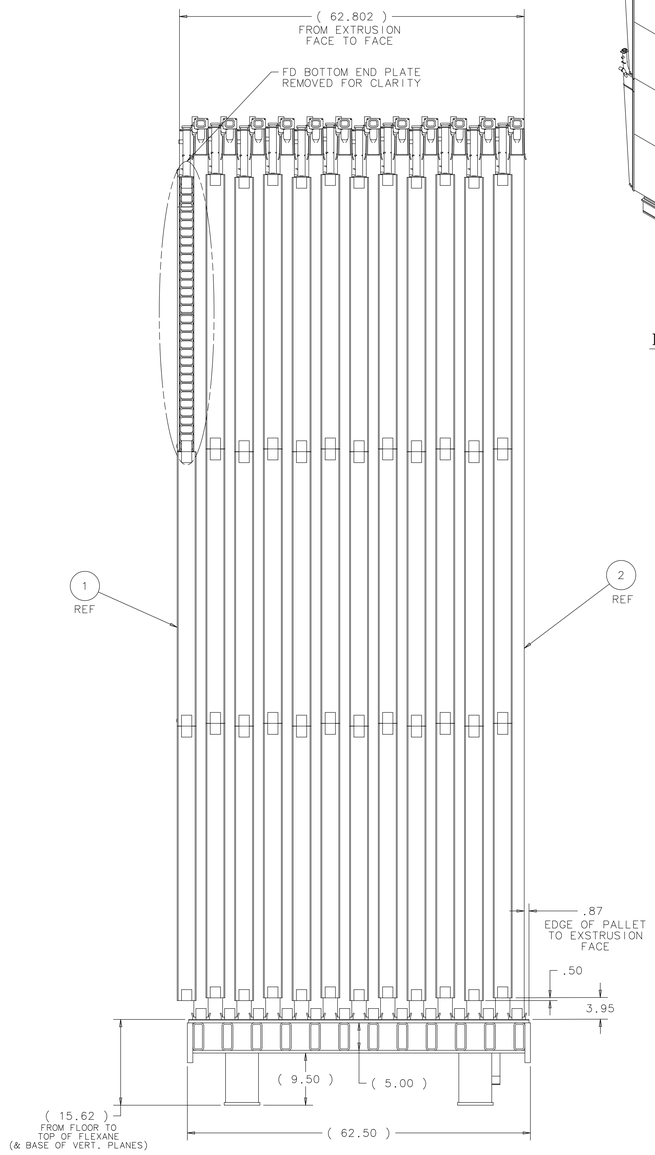

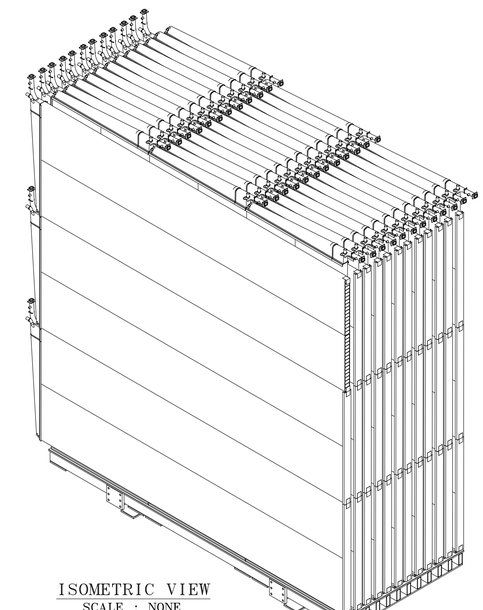

ISOMETRIC VIEW
SCALE : NONE

WEIGHT = 22,395 LBS

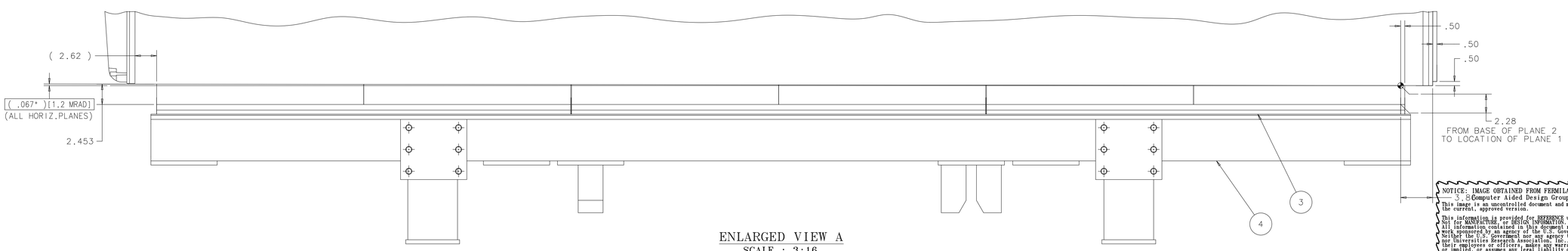

ENLARGED VIEW A
SCALE : 3:16

ITEM	PART NO.	DESCRIPTION OR SIZE	QTY.
4	ME-493063	ND PALLET WELDMENT	1
3	COML	ND FLEXANE 80 PUTTY 1/4" THICK (MAX.)	---
2	ME-493041	3 MODULE ND VERTICAL PLANE	12
1	ME-493040	3 MODULE ND HORIZONTAL PLANE	12

PARTS LIST

UNLESS OTHERWISE SPECIFIED					
.XX	.XXX	ANGLES	ORIGINATOR	E.VILLEGAS	10-OCT-2012
± .12	± ---	± ---	DRAWN	G.SMITH	10-OCT-2012
			CHECKED	D.FRIEND	14-NOV-2012
			APPROVED	E.VILLEGAS	14-NOV-2012

1. BREAK ALL SHARP EDGES .015 MAX.
2. DO NOT SCALE DRAWING.
3. DIMENSIONS BASED UPON ASME Y14.5M-1994
4. MAX. ALL MACH. SURFACES ---/
5. DRAWING UNITS: U.S. INCH

USED ON

MATERIAL
SEE PARTS LIST ABOVE

FERMI NATIONAL ACCELERATOR LABORATORY
UNITED STATES DEPARTMENT OF ENERGY

NOTICE: IMAGE OBTAINED FROM FERMILAB 3.8 Computer Aided Design Group.
This image is an uncontrolled document and may not be the current, approved version.

This information is provided for REFERENCE use only. Not for MANUFACTURE or DESIGN INFORMATION. All information contained in this document represents work sponsored by an agency of the U.S. Government. Neither the U.S. Government nor any agency thereof, nor Universities Research Association, Inc., nor any of their employees or officers, makes any warranty, express or implied, or assumes any legal liability or responsibility for the accuracy, completeness, or usefulness of any information, apparatus, product or process disclosed, or represents that its use would not infringe privately owned rights.

NOVA-NEAR_DETECTOR
MODULES
24 PLANE ND BLOCK ASSY

SCALE	DRAWING NUMBER	SHEET	REV
1:32 & AS NOTED	3929.330-ME-493039	1 OF 1	

CREATED WITH : Ideas12NXSeries GROUP: PPD/MECHANICAL DEPARTMENT