REV	DESCRIPTION	DRAWN	DATE
		APPROVED	DATE
A	UPDATER GUTTER SIZES, CHG'D END PLATE (ITEM #3) FROM .125 X 1.00 X 2.00	D.FRIEND	05-DEC-2012
		J.RAUCH	06-DEC-2012

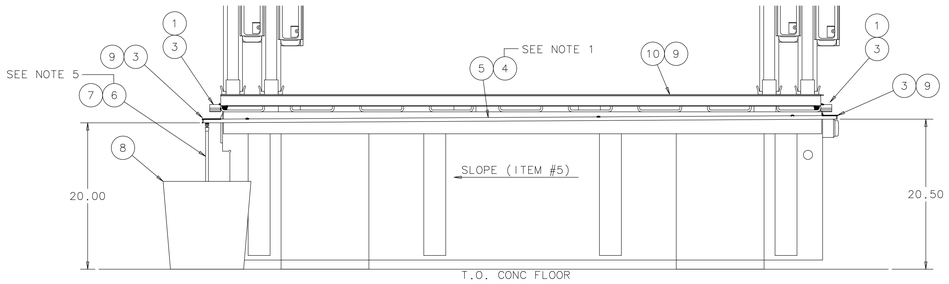

VIEW B-B
WEST SIDE
SCALE: 1:8

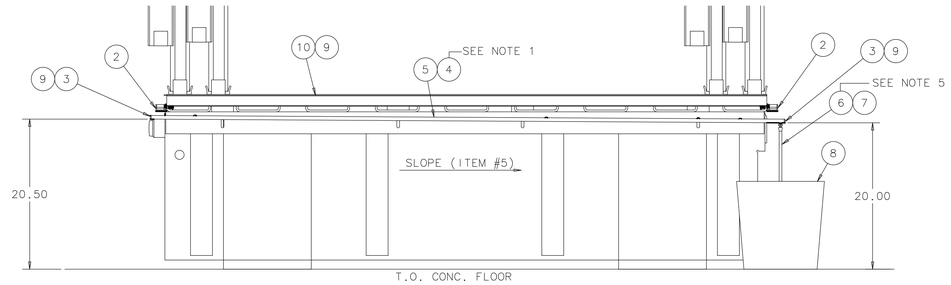

VIEW A-A
EAST SIDE
SCALE: 1:8

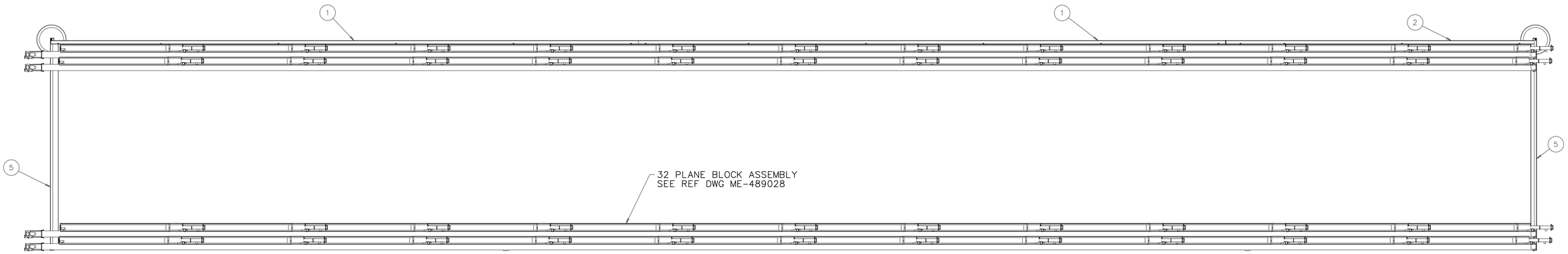

PLAN VIEW
SCALE:3/4" = 1'-0"

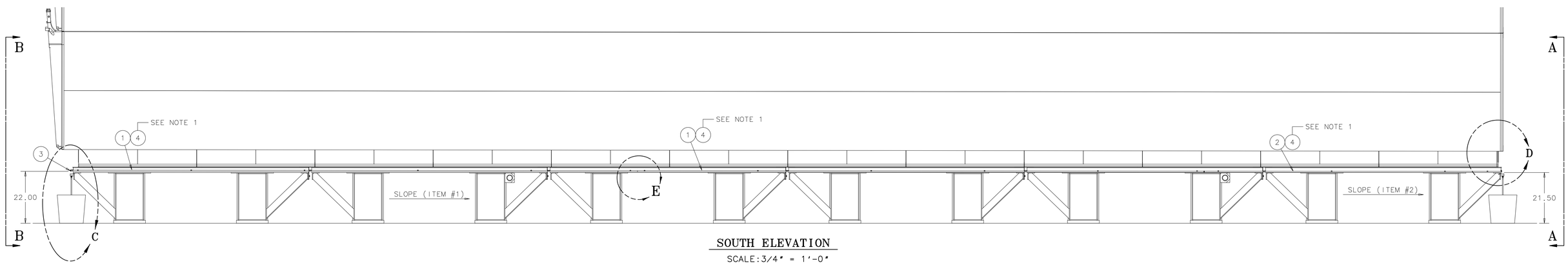

SOUTH ELEVATION
SCALE:3/4" = 1'-0"

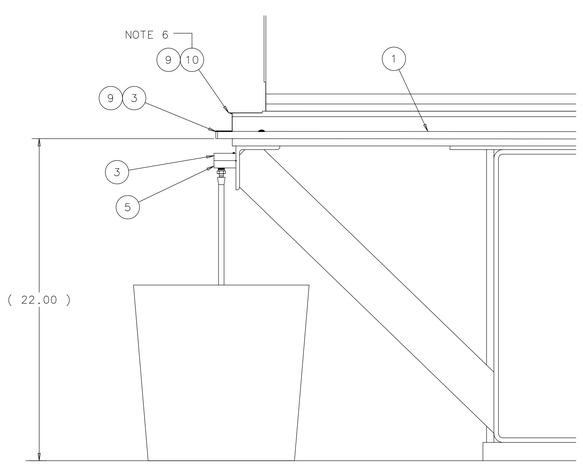

DETAIL "C"
SCALE: 1:4

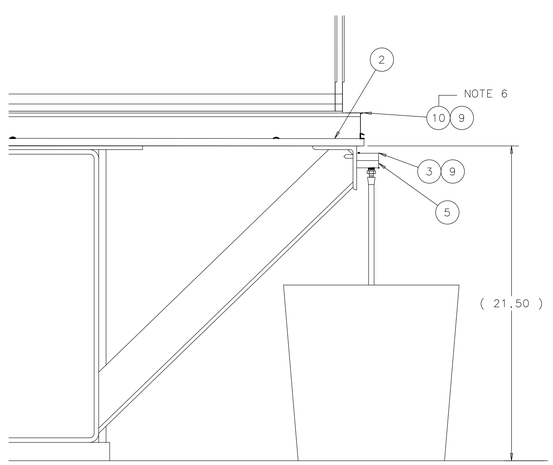

DETAIL "D"
SCALE: 1:4

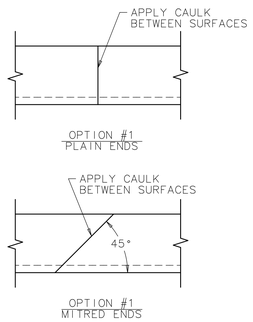

DETAIL "E"
GUTTER JOINT DETAIL
SCALE: 1:1

NOTES:

1. FIELD DRILL USING #1 (ø.228) DRILL THRU EXIST. PALLET STEEL FOR INSTALLATION OF THREAD CUTTING SCREWS (ITEM #4).
2. GLUE OR WELD END PLATES (ITEMS #3) TO GUTTERS (ITEMS #1 & 5).
3. APPLY CLEAR SILICONE CAULK (ITEM #9) TO ALL SEAMS AND JOINTS.
4. ALL GUTTERS SHALL BE SLOPED FOR A TOTAL OF 0.50" OVER THE PALLET SIDES TOTAL LENGTH.
5. FIELD DRILL & TAP FOR 1/8" NPT FOR HOSE ADAPTER (ITEM #6) IN THE EAST/WEST GUTTER (ITEM #5). DO NOT PROTRUDE ADAPTER PAST THE INNER SURFACE OF THE GUTTER AND APPLY SEALANT TO THE PIPE THREADS.
6. FIELD TO TRIM DRIP EDGE (ITEM #10) AS NEEDED. FASTEN DRIP EDGE TO PALLET WITH CAULK (ITEM #9). APPLY CAULK TO ANY AND ALL SEAMS AND OR JOINTS.

ITEM	PART NO.	DESCRIPTION OR SIZE	QTY.
10	COML	DRIP EDGE, ALUIMUM, NOTE 6 2.5" NOM X 1.5" NOM X 10 FT LONG	A/R
9	COML	CAULK, CLEAR SILICONE, DOW 732 OR EQUAL MCMASTER CARR #7587A37	A/R
8	COML	PAINT CAN, 1 GAL, TIN MCMASTER CARR #4084T66	2
7	COML	TUBING, 1/4" ID X 3/8" OD, BLACK PVC, MCMASTER CARR #5231K83	A/R
6	COML	HOSE ADAPTER, 1/4" ID X 1/8" NPT (MALE) 303 S.S., MCMASTER CARR #5670K86	2
5	MC-493061	EAST/WEST GUTTER	2
4	COML	SCREW, THREAD CUTTING, HEX HD, S.S. 1/4"-20 UNC X 3/4" LG. MCMASTER CARR #96024A420	32
3	COML	END PLATE, 1/8" X 0.50 X 1.50 CARBON STEEL	6
2	MC-493059	NORTH/SOUTH GUTTER - SHORT	2
1	MC-493060	NORTH/SOUTH GUTTER - LONG	4

PARTS LIST

UNLESS OTHERWISE SPECIFIED			ORIGINATOR	P.LUKENS	16-OCT-2012
.XX	.XXX	ANGLES	DRAWN	D.FRIEND	16-OCT-2012
± .12	± ---	± 1°	CHECKED	J.RAUCH	25-OCT-2012
			APPROVED	D.FRIEND	25-OCT-2012

1. BREAK ALL SHARP EDGES .015 MAX.
2. DO NOT SCALE DRAWING.
3. DIMENSIONS BASED UPON ASME Y14.5M-1994
4. MAX. ALL MACH. SURFACES 125
5. DRAWING UNITS: U.S. INCH

USED ON

MATERIAL
SEE PARTS LIST ABOVE

FERMI NATIONAL ACCELERATOR LABORATORY
UNITED STATES DEPARTMENT OF ENERGY

NOVA-FAR_DETECTOR
BLOCK ASSY & INSTALLATION
BLOCK ASSY GUTTER ASSY

SCALE	DRAWING NUMBER	SHEET	REV
AS NOTED	3929.330-ME-493062	1 OF 1	A

CREATED WITH : Ideas12NXSeries GROUP: PPD/MECHANICAL DEPARTMENT

NOTICE: IMAGE OBTAINED FROM FERMILAB
Computer Aided Design Group.
This image is an uncontrolled document and may not be the current, approved version.
This information is provided for REFERENCE use only. Not for MANUFACTURE, or DESIGN INFORMATION. All information contained in this document represents work sponsored by an agency of the U.S. Government. Neither the Government, nor the Fermi Research Alliance, Universities Research Association, Inc., nor of their employees or officers, makes any warranty, express or implied, or assumes any legal liability or responsibility for the accuracy, completeness, or usefulness of any information, apparatus, product or process disclosed, or represents that its use would not infringe privately owned rights.