REV	DESCRIPTION	DRAWN / APPROVED	DATE
A	ITEM 1 & 2 MODIFIED ITEM 6 WAS 6" HIGH NOW 4" CHANGED HOLE LOCATIONS IN VIEW A-A AND BACK VIEW 101.00" WAS 102.00" 37.00" WAS 36.00"	G SMITH	24-SEP-2012
		D FRIEND	27-SEP-2012

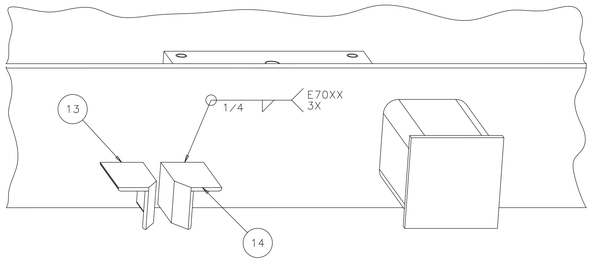

BOTTOM VIEW(ROTATED)

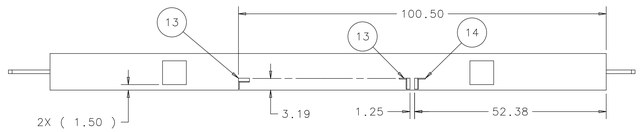

BOTTOM VIEW

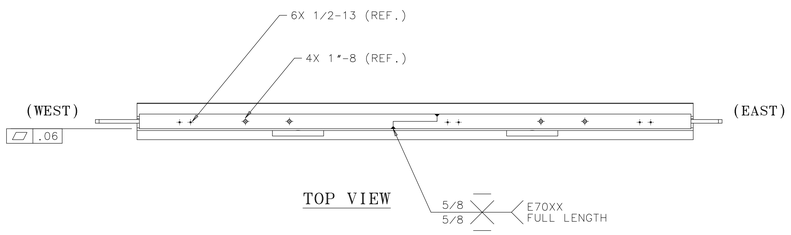

TOP VIEW

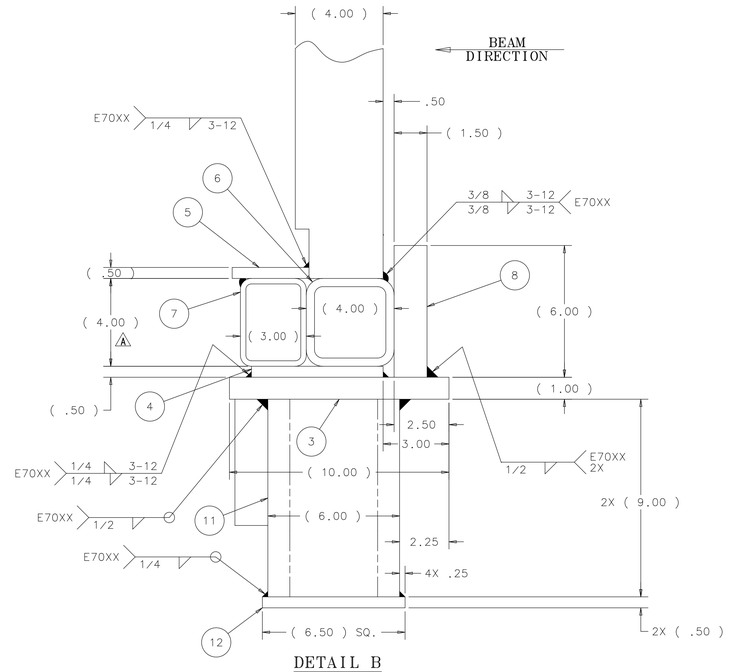

DETAIL B
SCALE : 3:8

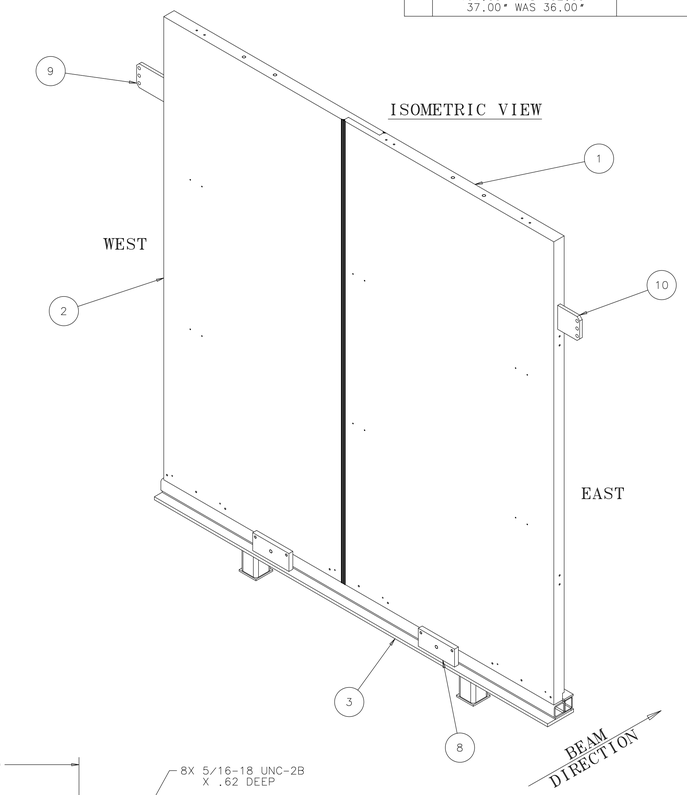

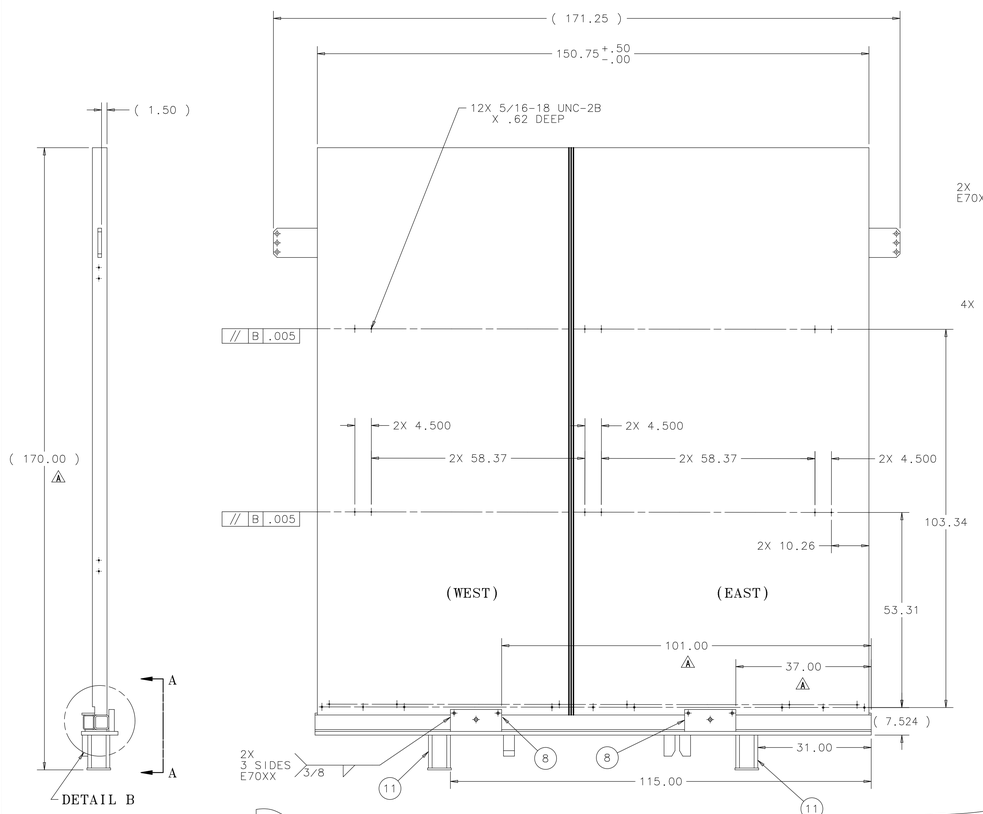

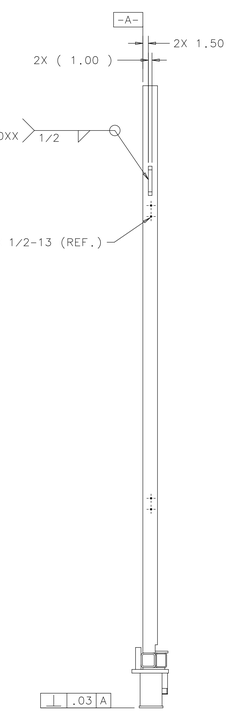

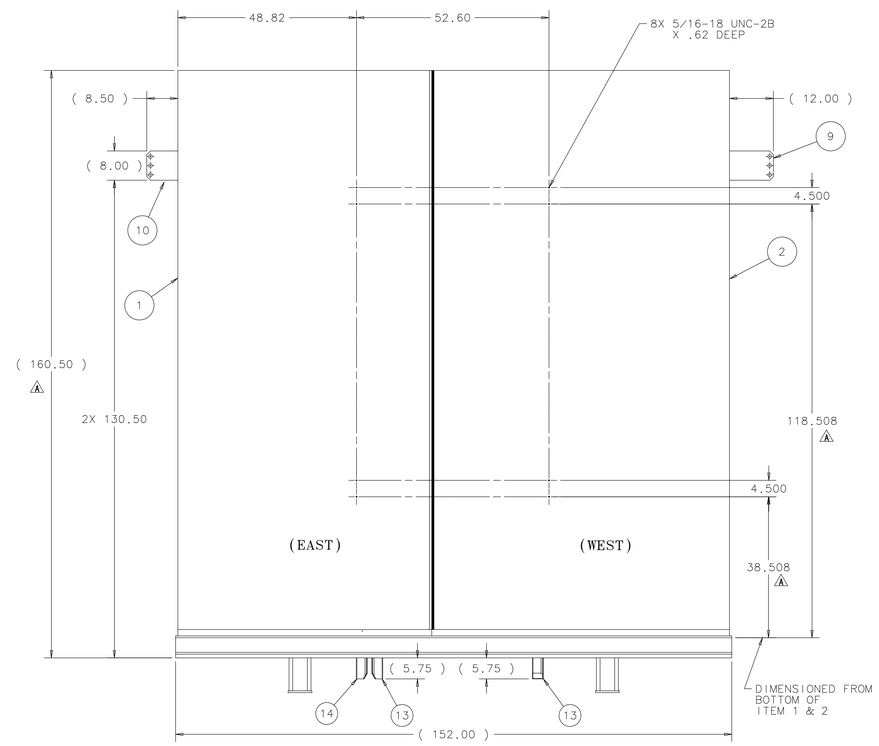

NOTES:

1. TOUCH-UP ALL WELD AND BURN MARKS WITH (2) COATS OF RED PRIMER PAINT.

ESTIMATED WEIGHT = 27,600 LBS

ITEM	PART NO.	DESCRIPTION OR SIZE	QTY.
14	MB-489926	L3 X 3 X .25 X5.75 LG.-RIGHT	1
13	MB-489925	L3 X 3 X .25 X5.75 LG.-LEFT	2
12	COML	STEEL BAR 1/2 X 6.50 X 6.50 LG.	2
11	COML	STRUCTURAL STEEL TUBING-SQUARE 6 X 6 X 1/2 WALL X 9.00 LG. ASTM A 500 GR. B	2
10	MB-489909	STABILIZING RIGHT EAR	1
9	MB-489908	STABILIZING LEFT EAR	1
8	MB-489906	STOP BLOCK	2
7	COML	STRUCTURAL STEEL TUBING-RECTANGULAR 4 X 3 X 1/4 WALL X 152 LG. ASTM A 500 GR. B	1
6	COML	STRUCTURAL STEEL TUBING-RECTANGULAR 4 X 4 X 3/8 WALL X 152 LG. ASTM A 500 GR. B	1
5	COML	STEEL BAR 1/2 X 3.50 X 152 LG.	1
4	COML	STEEL BAR 1/2 X 6 X 152 LG.	1
3	COML	STEEL BASE 1 X 10 X 152 LG.	1
2	ME-489905	MC WEST STEEL HALF PLATE	1
1	ME-489904	MC EAST STEEL HALF PLATE	1

PARTS LIST

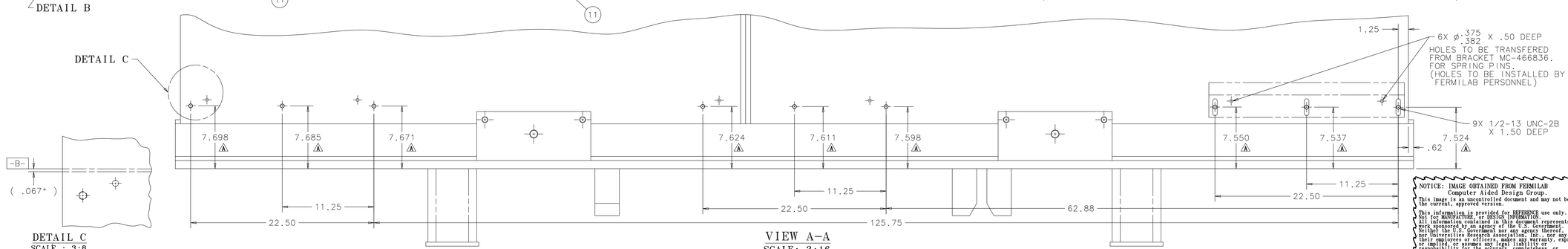

UNLESS OTHERWISE SPECIFIED					
.XX	.XXX	ANGLES	ORIGINATOR	E.VILLEGAS	13-AUG-2012
± .03	± .015	± ---	DRAWN	G.SMITH	13-AUG-2012
			CHECKED	D.FRIEND	31-AUG-2012
			APPROVED	E.VILLEGAS	31-AUG-2012

1. BREAK ALL SHARP EDGES .015 MAX.
2. DO NOT SCALE DRAWING.
3. DIMENSIONS BASED UPON ASME Y14.5M-1994
4. MAX. ALL MACH. SURFACES
5. DRAWING UNITS: U.S.INCH

USED ON

MATERIAL: SEE PARTS LIST ABOVE

FERMI NATIONAL ACCELERATOR LABORATORY
UNITED STATES DEPARTMENT OF ENERGY

NOVA-NEAR_DETECTOR
MUON CATCHER
ND MUON CATCHER WELDMENT

SCALE	DRAWING NUMBER	SHEET	REV
1:16 & AS NOTED	3929.330-ME-489903	1 OF 1	A

CREATED WITH : Ideas12NXSeries | GROUP: PPD/MECHANICAL DEPARTMENT

NOTICE: IMAGE OBTAINED FROM FERMILAB Computer Aided Design Group.
This image is an uncontrolled document and may not be the current, approved version.
This information is provided for REFERENCE use only. Not for MANUFACTURE or DESIGN INFORMATION. All information contained in this document represents work sponsored by an agency of the U.S. Government. Neither the U.S. Government nor any agency thereof, nor Universities Research Association, Inc., nor any of their employees, makes any warranty, express or implied, or assumes any liability or responsibility for the accuracy, completeness, or usefulness of any information, apparatus, product or process disclosed, or represents that its use would not infringe privately owned rights.