REV	DESCRIPTION	DRAWN	DATE
		APPROVED	DATE

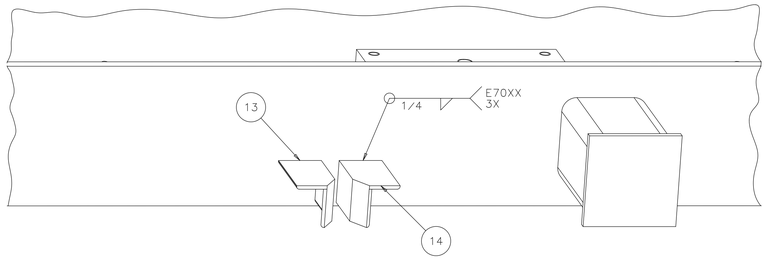

BOTTOM VIEW(ROTATED)

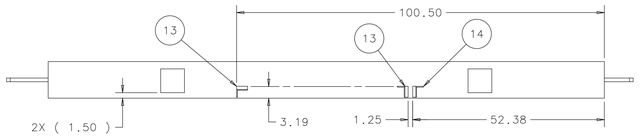

BOTTOM VIEW

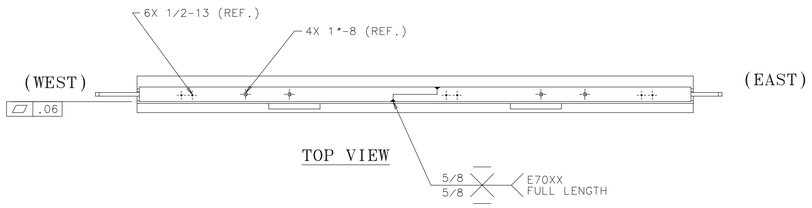

TOP VIEW

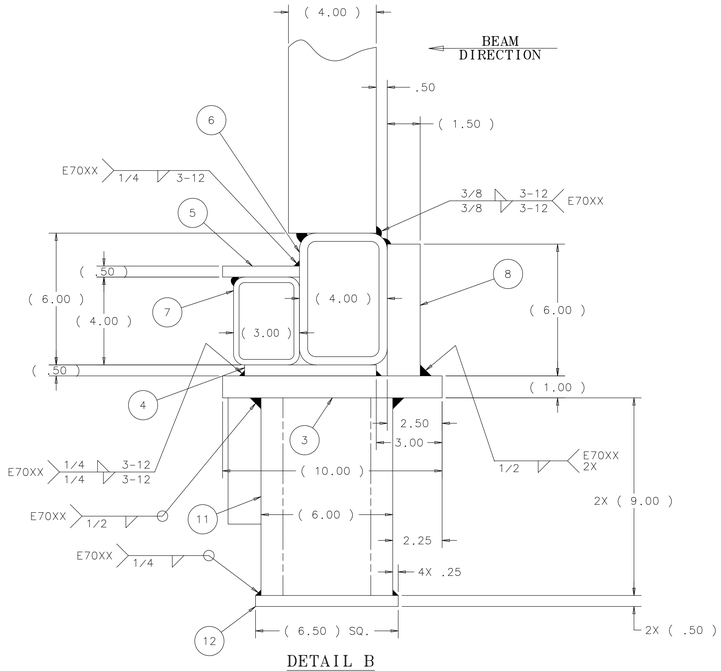

DETAIL B
SCALE : 3:8

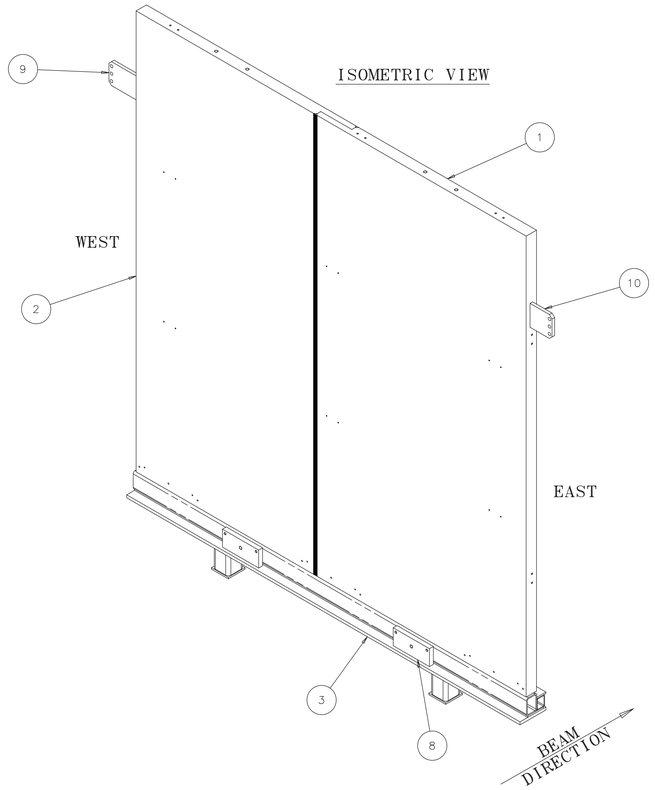

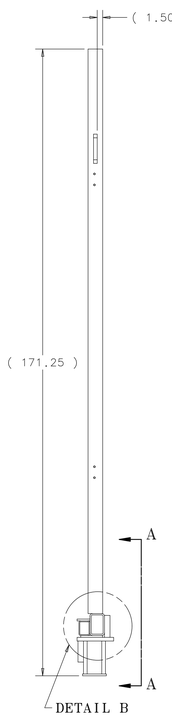

DETAIL B

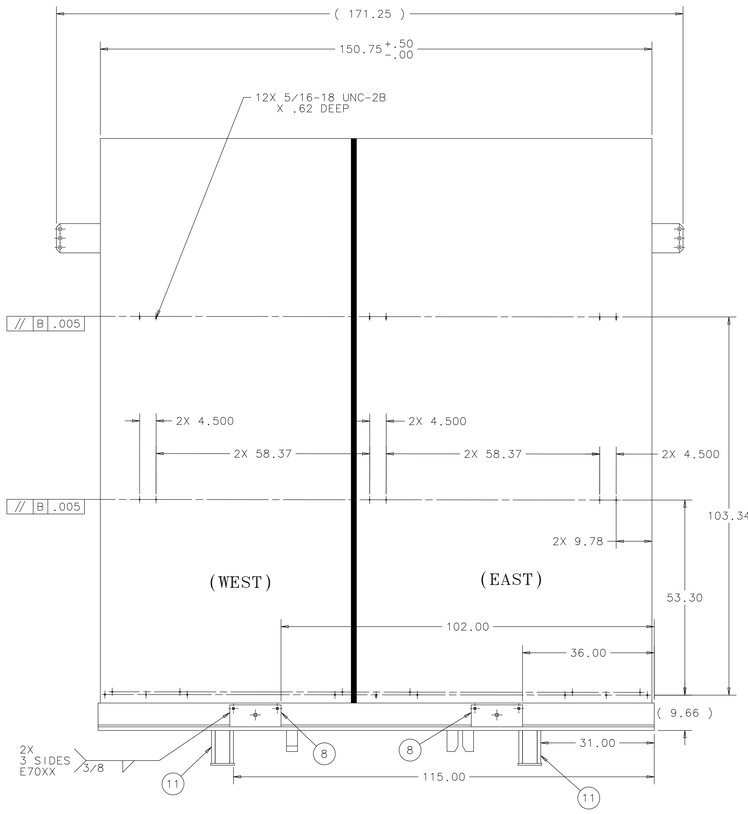

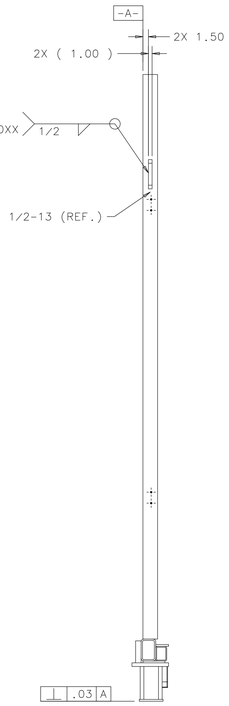

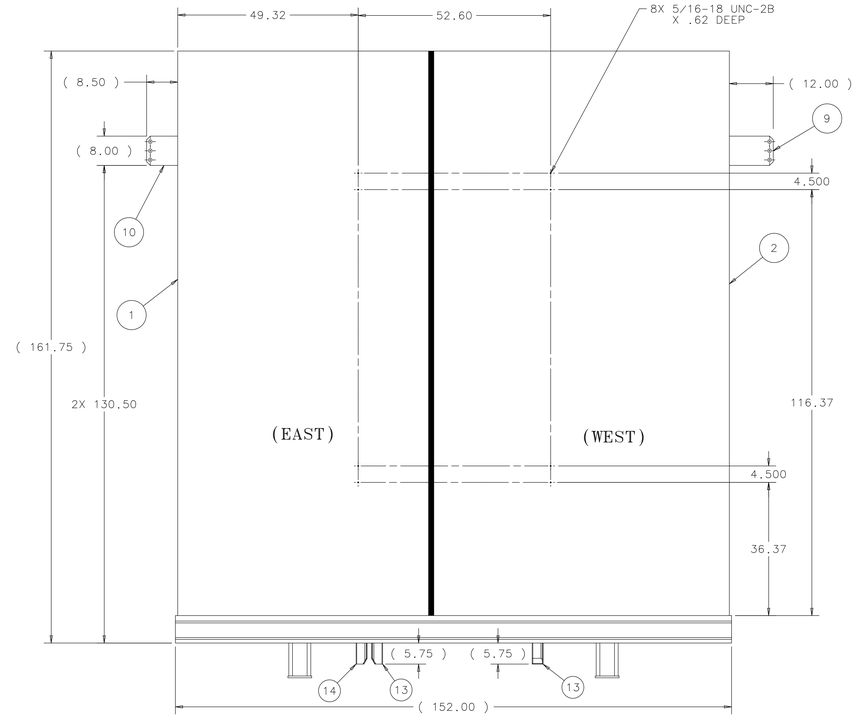

NOTES:

1. TOUCH-UP ALL WELD AND BURN MARKS WITH (2) COATS OF RED PRIMER PAINT.

ESTIMATED WEIGHT = 27,600 LBS

ITEM	PART NO.	DESCRIPTION OR SIZE	QTY.
14	MB-489926	L3 X 3 X .25 X5.75 LG.-RIGHT	1
13	MB-489925	L3 X 3 X .25 X5.75 LG.-LEFT	2
12	COML	STEEL BAR - ASTM A36 1/2 X 6.50 X 6.50 LG.	2
11	COML	STRUCTURAL STEEL TUBING-SQUARE 6 X 6 X 1/2 WALL X 9.00 LG. ASTM A 500 GR. B	2
10	MB-489909	STABILIZING EAST EAR	1
9	MB-489908	STABILIZING WEST EAR	1
8	MB-489906	STOP BLOCK	2
7	COML	STRUCTURAL STEEL TUBING-RECTANGULAR 4 X 3 X 1/4 WALL X 152.00 LG. ASTM A 500 GR. B	1
6	COML	STRUCTURAL STEEL TUBING-RECTANGULAR 6 X 4 X 3/8 WALL X 152.00 LG. ASTM A 500 GR. B	1
5	COML	STEEL BAR - ASTM A36 1/2 X 3.50 X 152.00 LG.	1
4	COML	STEEL BAR - ASTM A36 1/2 X 6 X 152.00 LG.	1
3	COML	STEEL BAR - ASTM A36 1 X 10 X 152.00 LG.	1
2	ME-489905	MC WEST STEEL HALF PLATE	1
1	ME-489904	MC EAST STEEL HALF PLATE	1

PARTS LIST

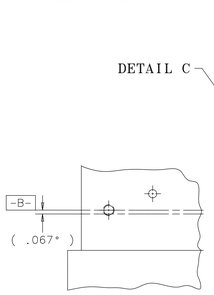

DETAIL C
SCALE : 3:8

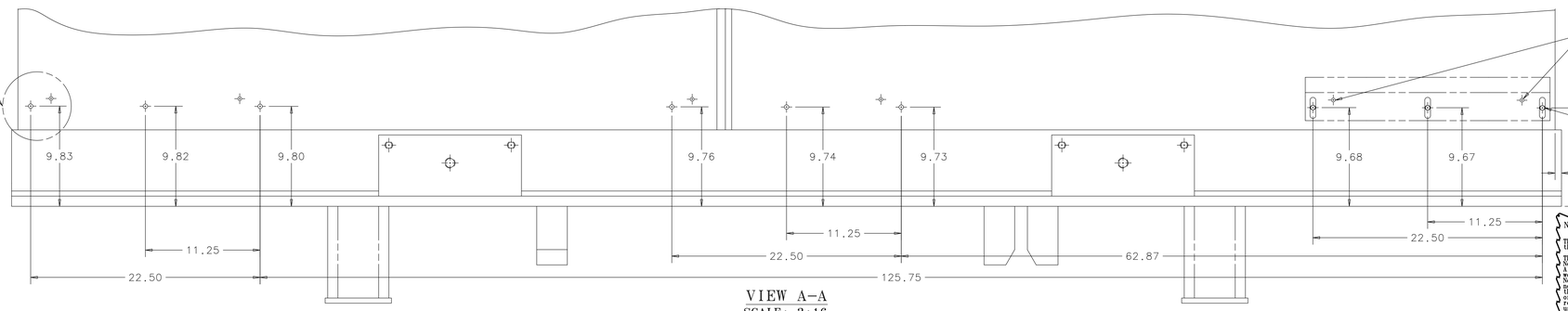

VIEW A-A
SCALE: 3:16

NOTICE: IMAGE OBTAINED FROM FERMILAB Computer Aided Design Group.

This image is an uncontrolled document and may not be the current, approved version.

This information is provided for REFERENCE use only. Not for MANUFACTURE, or DESIGN INFORMATION. All information contained in this document represents work sponsored by an agency of the U.S. Government. Neither the U.S. Government nor any agency thereof, nor Universities Research Association, Inc., nor any of their employees or officers, makes any warranty, express or implied, or assumes any legal liability or responsibility for the accuracy, completeness, or usefulness of any information, apparatus, product or process disclosed, or represents that its use would not infringe privately owned rights.

UNLESS OTHERWISE SPECIFIED			ORIGINATOR	E.VILLEGAS	23-AUG-2012
.XX	.XXX	ANGLES	DRAWN	G.SMITH	23-AUG-2012
± .03	± .015	± ---	CHECKED	D.FRIEND	31-AUG-2012
1. BREAK ALL SHARP EDGES .015 MAX. 2. DO NOT SCALE DRAWING. 3. DIMENSIONS BASED UPON ASME Y14.5M-1994 4. MAX. ALL MACH. SURFACES 5. DRAWING UNITS: U.S. INCH			APPROVED	E.VILLEGAS	31-AUG-2012
			USED ON		
			MATERIAL SEE PARTS LIST ABOVE		

FERMI NATIONAL ACCELERATOR LABORATORY
UNITED STATES DEPARTMENT OF ENERGY

NOVA-NEAR_DETECTOR
MUON CATCHER
ND STAGGARD MUON CATCHER WLDMNT

SCALE	DRAWING NUMBER	SHEET	REV
1:16 & AS NOTED	3929.330-ME-489923	1 OF 1	

CREATED WITH : Ideas12NXSeries GROUP: PPD/MECHANICAL DEPARTMENT