REV	DESCRIPTION	DRAWN	DATE
		APPROVED	DATE

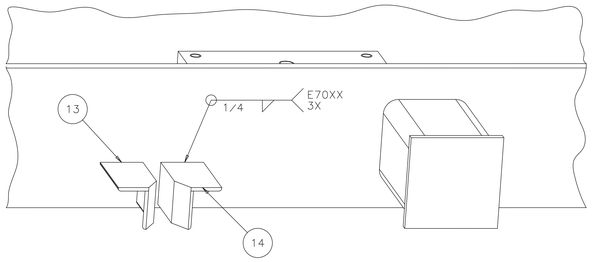

BOTTOM VIEW(ROTATED)

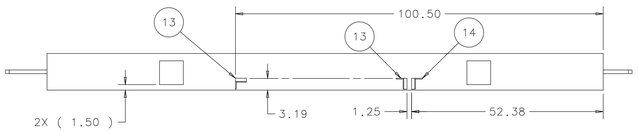

BOTTOM VIEW

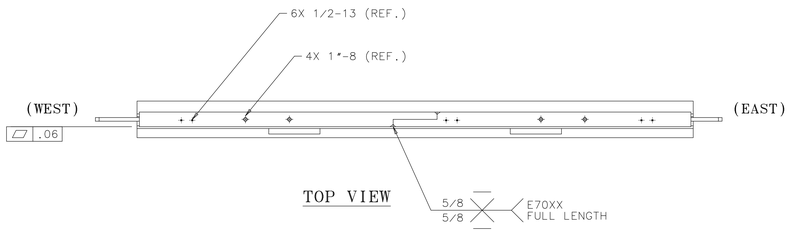

TOP VIEW

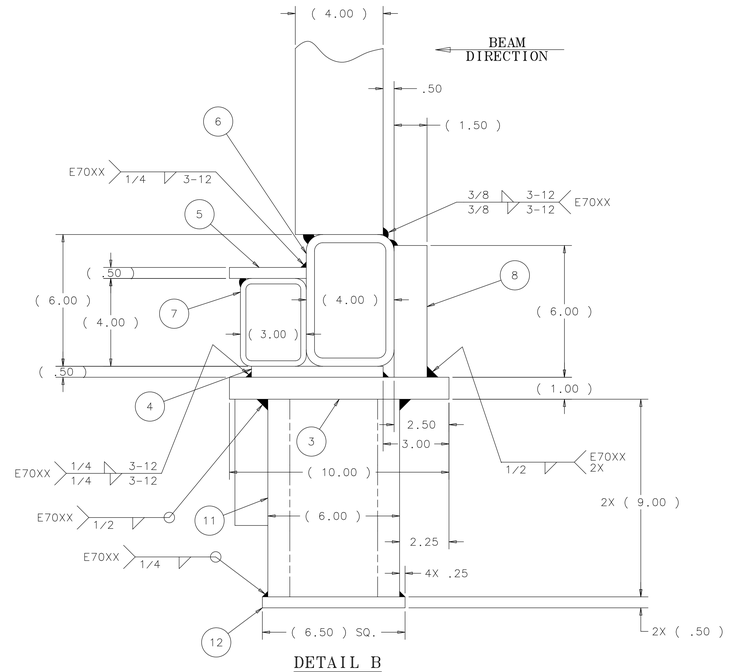

DETAIL B
SCALE : 3:8

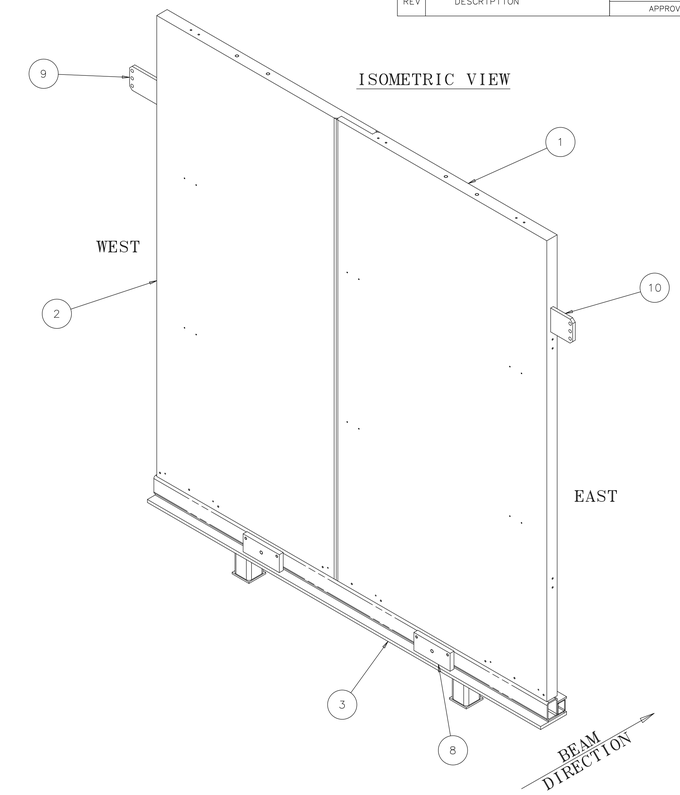

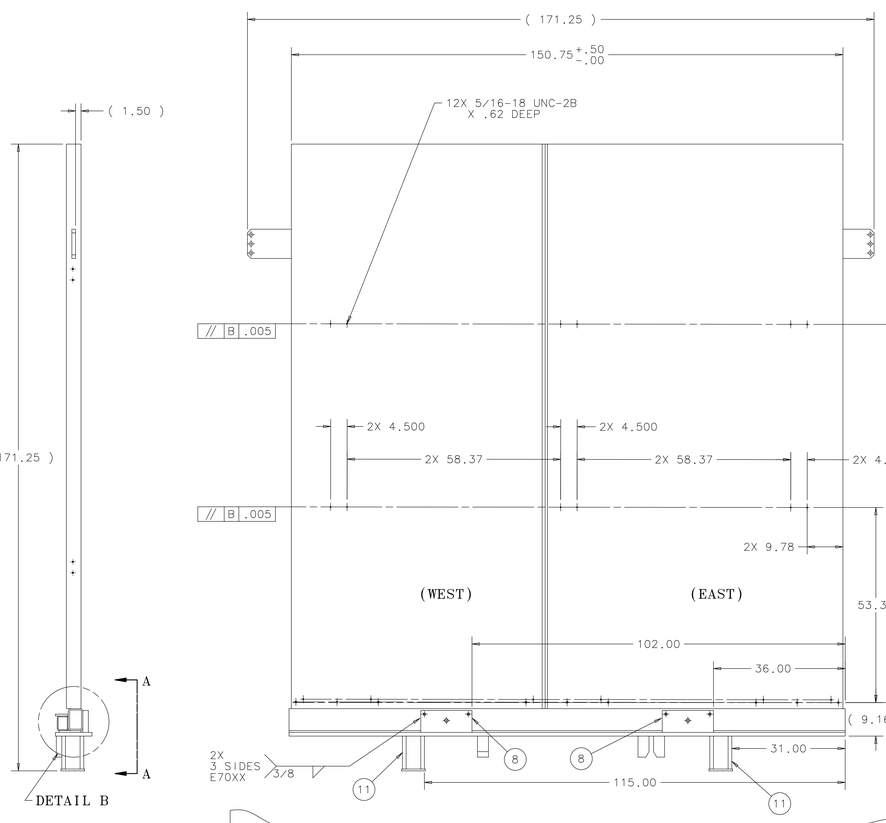

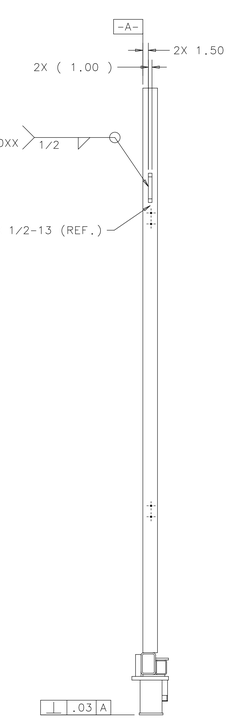

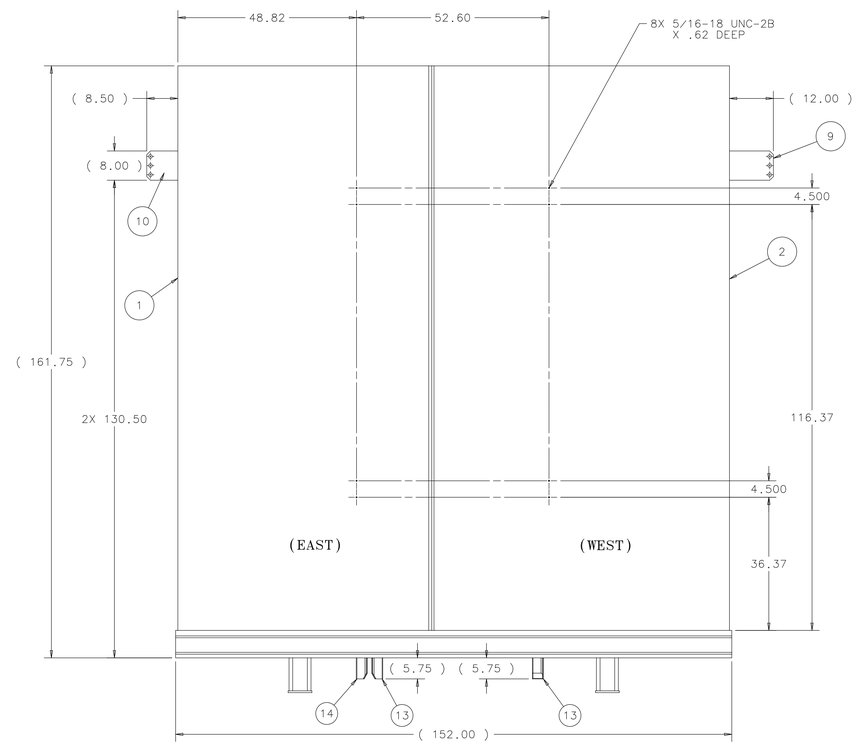

NOTES:

1. TOUCH-UP ALL WELD AND BURN MARKS WITH (2) COATS OF RED PRIMER PAINT.

ESTIMATED WEIGHT = 27,600 LBS

ITEM	PART NO.	DESCRIPTION OR SIZE	QTY.
14	MB-489926	L3 X 3 X .25 X5.75 LG.-RIGHT	1
13	MB-489925	L3 X 3 X .25 X5.75 LG.-LEFT	2
12	COML	STEEL BAR 1/2 X 6.50 X 6.50 LG.	2
11	COML	STRUCTURAL STEEL TUBING-SQUARE 6 X 6 X 1/2 WALL X 9.00 LG. ASTM A 500 GR. B	2
10	MB-489909	STABILIZING RIGHT EAR	1
9	MB-489908	STABILIZING LEFT EAR	1
8	MB-489906	STOP BLOCK	2
7	COML	STRUCTURAL STEEL TUBING-RECTANGULAR 4 X 3 X 1/4 WALL X 152 LG. ASTM A 500 GR. B	1
6	COML	STRUCTURAL STEEL TUBING-RECTANGULAR 6 X 4 X 3/8 WALL X 152 LG. ASTM A 500 GR. B	1
5	COML	STEEL BAR 1/2 X 3.50 X 152 LG.	1
4	COML	STEEL BAR 1/2 X 6 X 152 LG.	1
3	COML	STEEL BASE 1 X 10 X 152 LG.	1
2	ME-489905	MC WEST STEEL HALF PLATE	1
1	ME-489904	MC EAST STEEL HALF PLATE	1

PARTS LIST

UNLESS OTHERWISE SPECIFIED			ORIGINATOR	E.VILLEGAS	13-AUG-2012
.XX	.XXX	ANGLES	DRAWN	G.SMITH	13-AUG-2012
± .03	± .015	± ---	CHECKED	D.FRIEND	31-AUG-2012
1. BREAK ALL SHARP EDGES .015 MAX.			APPROVED	E.VILLEGAS	31-AUG-2012
2. DO NOT SCALE DRAWING. 3. DIMENSIONS BASED UPON ASME Y14.5M-1994 4. MAX. ALL MACH. SURFACES --- √			USED ON		
5. DRAWING UNITS: U.S. INCH			MATERIAL	SEE PARTS LIST ABOVE	

FERMI NATIONAL ACCELERATOR LABORATORY
UNITED STATES DEPARTMENT OF ENERGY

NOVA-NEAR_DETECTOR
MUON CATCHER
ND MUON CATCHER WELDMENT

SCALE	DRAWING NUMBER	SHEET	REV
1:16 & AS NOTED	3929.330-ME-489903	1 OF 1	
CREATED WITH : Ideas12NXSeries	GROUP: PPD/MECHANICAL DEPARTMENT		

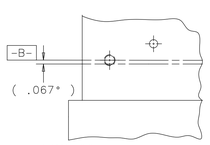

DETAIL C
SCALE : 3:8

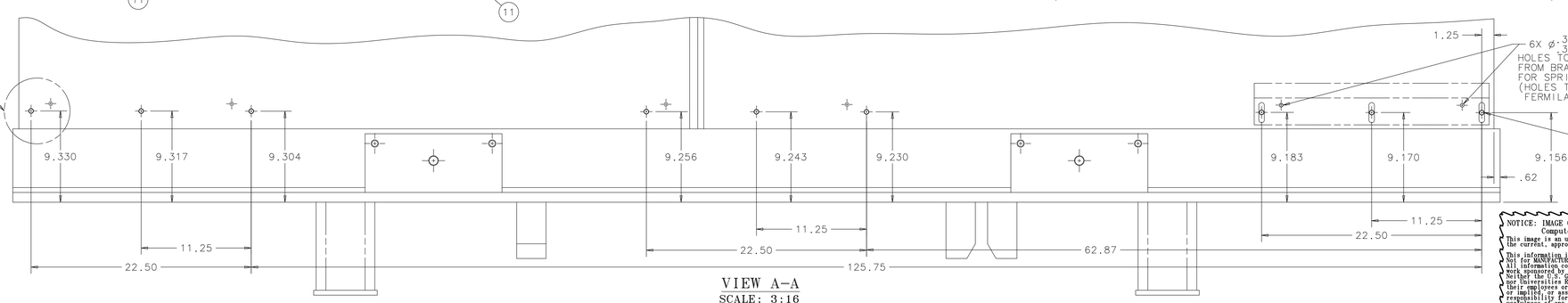

VIEW A-A
SCALE: 3:16

NOTICE: IMAGE OBTAINED FROM FERMILAB
Computer Aided Design Group.
This image is an uncontrolled document and may not be the current, approved version.
This information is provided for REFERENCE use only. FERMI NATIONAL ACCELERATOR LABORATORY
All information contained in this document represents work sponsored by an agency of the U.S. Government. Neither the U.S. Government nor any agency thereof, nor Universities Research Association, Inc., nor any of their employees or officers, makes any warranty, express or implied, or assumes any legal liability or responsibility for the accuracy, completeness, or usefulness of any information, apparatus, product or process disclosed, or represents that its use would not infringe privately owned rights.