REV	DESCRIPTION	DRAWN	DATE
		APPROVED	DATE
A	ADDED SHT 3, ADDED DETAIL K AND VIEW L-L & SEPARATE B.O.M.	T.SPERRY	13-AUG-2012
		D.FRIEND	22-AUG-2012

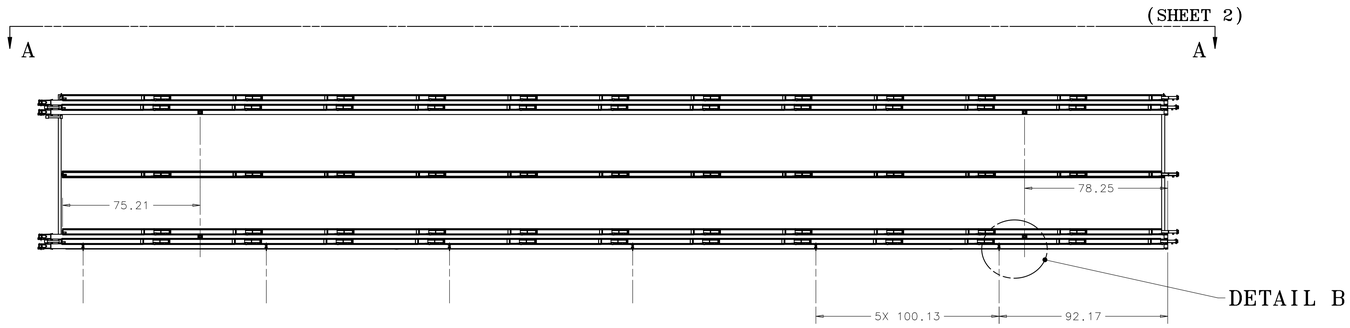

PLAN VIEW

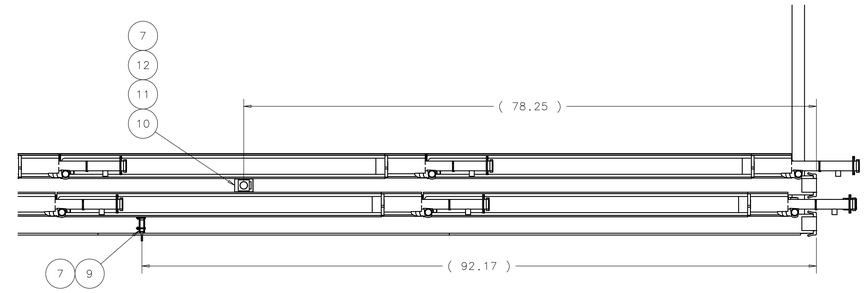

DETAIL B

SCALE: 1:8

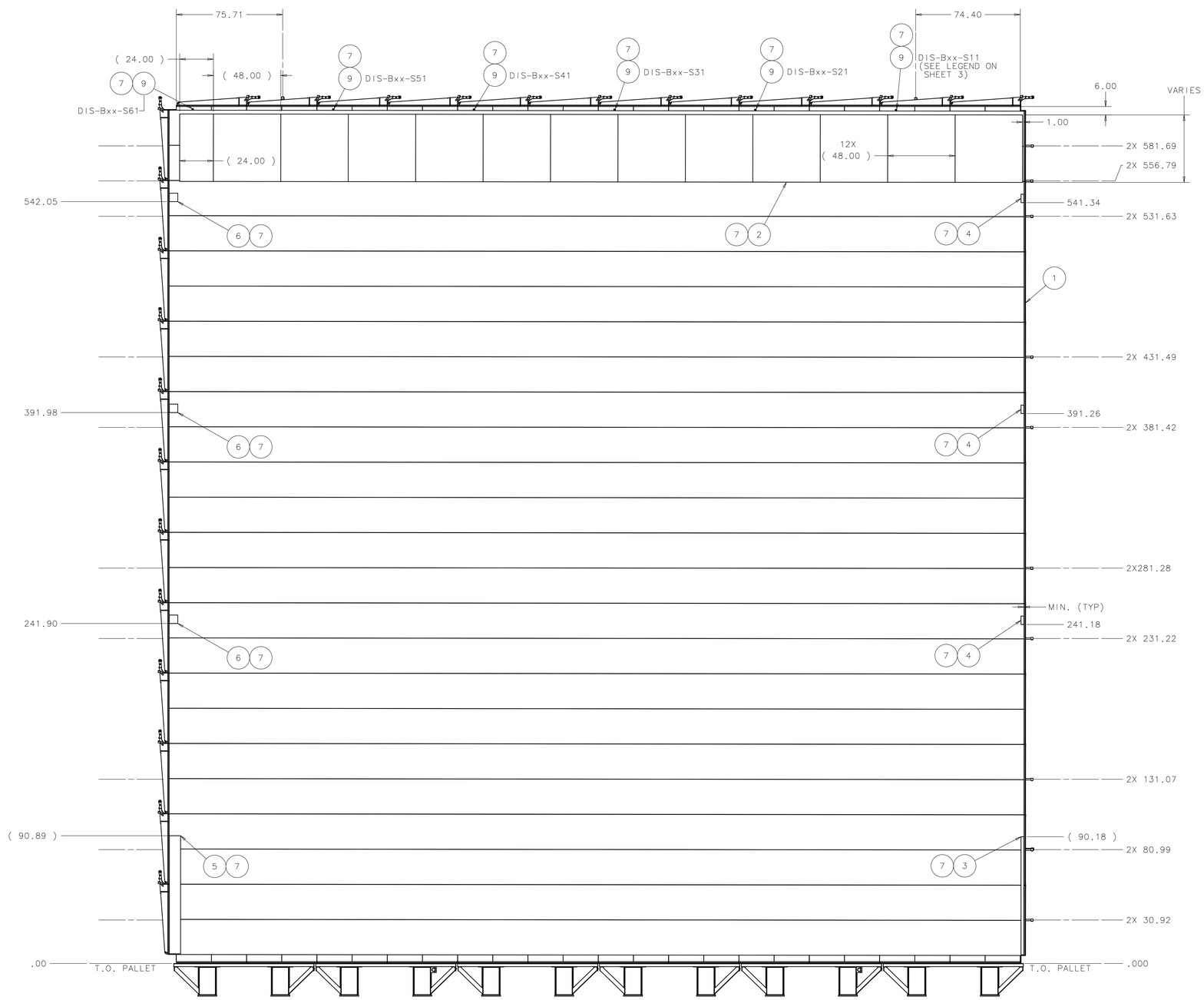

SOUTH ELEVATION
UPSTREAM END

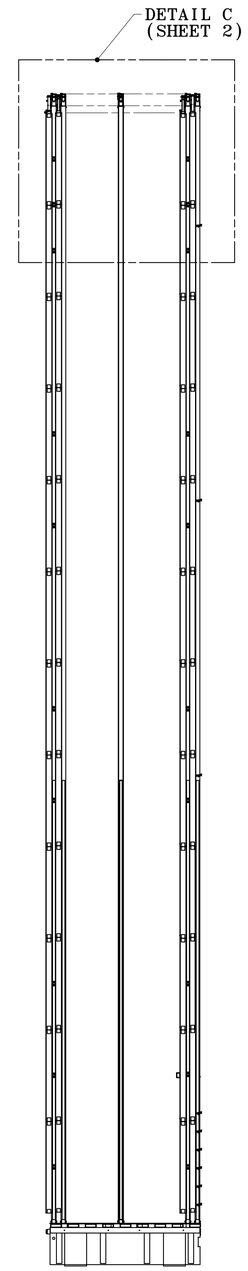

EAST ELEVATION
EAST END

NOTES:
1. BLOCK SHIMS (ITEM #2) SHALL ONLY BE USED ON BLOCKS #2 THRU #30. BLOCK #1 USES NO TOP GUIDED SPACER SHIM.

ITEM	PART NO.	DESCRIPTION OR SIZE	QTY.
12	COML	SURVEY OPTICAL PRISM BY OTHERS	44
11	COML	SURVEY TARGET MOUNTING ROD G-10, SEE DETAIL G	44
10	COML	SURVEY TARGET MOUNTING BLOCK PVC, SEE DETAIL F	44
9	MB-489633	LINEAR MOTION SENSOR SUB-ASSY	24
8	COML	SENSOR STRIKE PLATE, G-10 2.00 X 8.00 X 0.031" THK	6
7	COML	DEVCON PLASTIC WELDER ADHESIVE	A/R
6	COML	SENSOR STRIKE PLATE, G-10 6.00 X 6.00 X 0.031" THK	3
5	COML	SENSOR STRIKE PLATE, G-10 8.00 X 84.00 X 0.031" THK	1
4	COML	SENSOR STRIKE PLATE, G-10 2.00 X 6.00 X 0.031" THK	3
3	COML	SENSOR STRIKE PLATE, G-10 2.00 X 84.00 X 0.031" THK	1
2	MB-489081	BLOCK (TOP GUIDED) SPACER SHIM SEE NOTE 1.	12.5
1	ME-489028	32 PLANE BLOCK ASSY	1

PARTS LIST

UNLESS OTHERWISE SPECIFIED			ORIGINATOR	T.MIAO	23-MAY-2012
.XX	.XXX	ANGLES	DRAWN	D.FRIEND	23-MAY-2012
± .12	± .060	± ---	CHECKED	J.RAUCH	29-MAY-2012
			APPROVED	P.LUKENS	04-JUN-2012

1. BREAK ALL SHARP EDGES MAX.
2. DO NOT SCALE DRAWING.
3. DIMENSIONS BASED UPON ASME Y14.5M-1994
4. MAX. ALL MACH. SURFACES √
5. DRAWING UNITS: U.S. INCH

USED ON

MATERIAL
SEE PARTS LIST ABOVE

FERMI NATIONAL ACCELERATOR LABORATORY
UNITED STATES DEPARTMENT OF ENERGY

NOVA-FAR_DETECTOR
FAR DETECTOR
BLOCK ASSY INSTRUMENTATION

SCALE	DRAWING NUMBER	SHEET	REV
1:32 & AS NOTED	3929.330-ME-489571	1 OF 1	A

CREATED WITH : Ideas12NXSeries GROUP: PPD/MECHANICAL DEPARTMENT

NOTICE: THIS PAPER OBTAINED FROM FERMILAB WEB SITE
This information is provided for REFERENCE use only. Not for MANUFACTURE, or DESIGN INFORMATION. All information contained in this document represents work sponsored by an agency of the U.S. Government. Neither the U.S. Government nor any agency thereof, nor Universities Research Association, Inc., nor any of their employees or officers, makes any warranty, express or implied, or assumes any legal liability or responsibility for the accuracy, completeness, or usefulness of any information, apparatus, product or process disclosed, or represents that its use would not infringe privately owned rights.

Created: 15:32:38 on 23-08-12 (D-M-Y) By: friend State: 1-INITIAL

REV	DESCRIPTION	DRAWN	DATE
		APPROVED	DATE

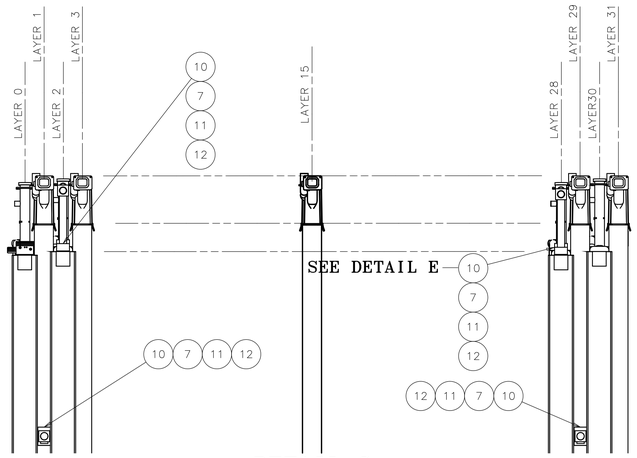

DETAIL C
SCALE: 1:8

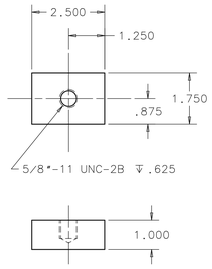

DETAIL F
TARGET MOUNTING BLOCK
BY FERMI ALIGNMENT
SCALE: 1:2

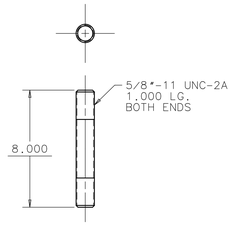

DETAIL G
TARGET MOUNTING ROD
BY FERMI ALIGNMENT
SCALE: 1:2

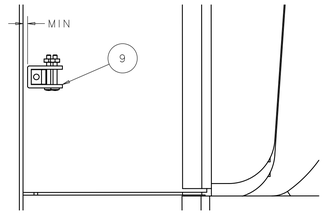

DETAIL H
TYP SENSOR
INSTALLATION
SCALE: 1:2

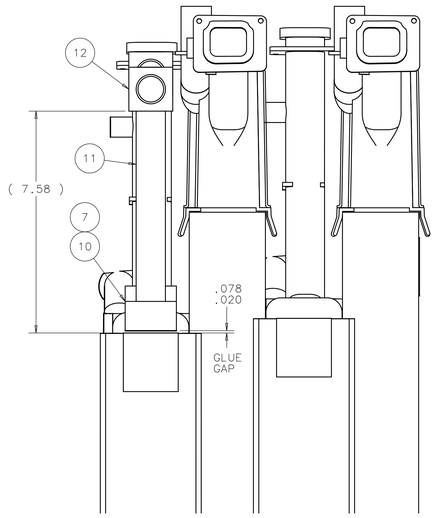

DETAIL E
SURVEY TARGET DETAIL
SCALE: 1:2

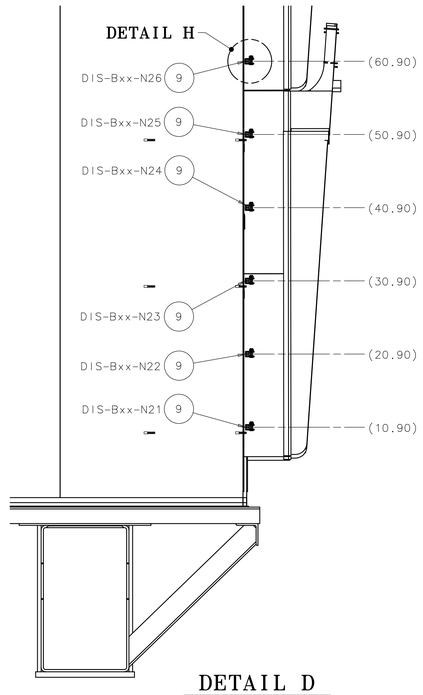

DETAIL D
DOWNSTREAM SENSORS
ON LAYER 30
SCALE: 1:8

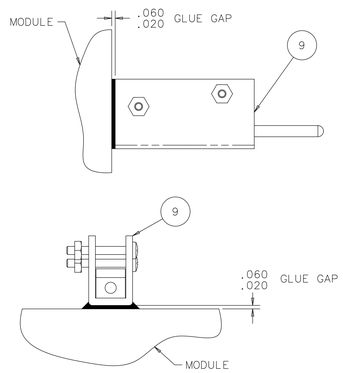

DETAIL J
SENSOR GLUEING DETAILS
SCALE: 1:1

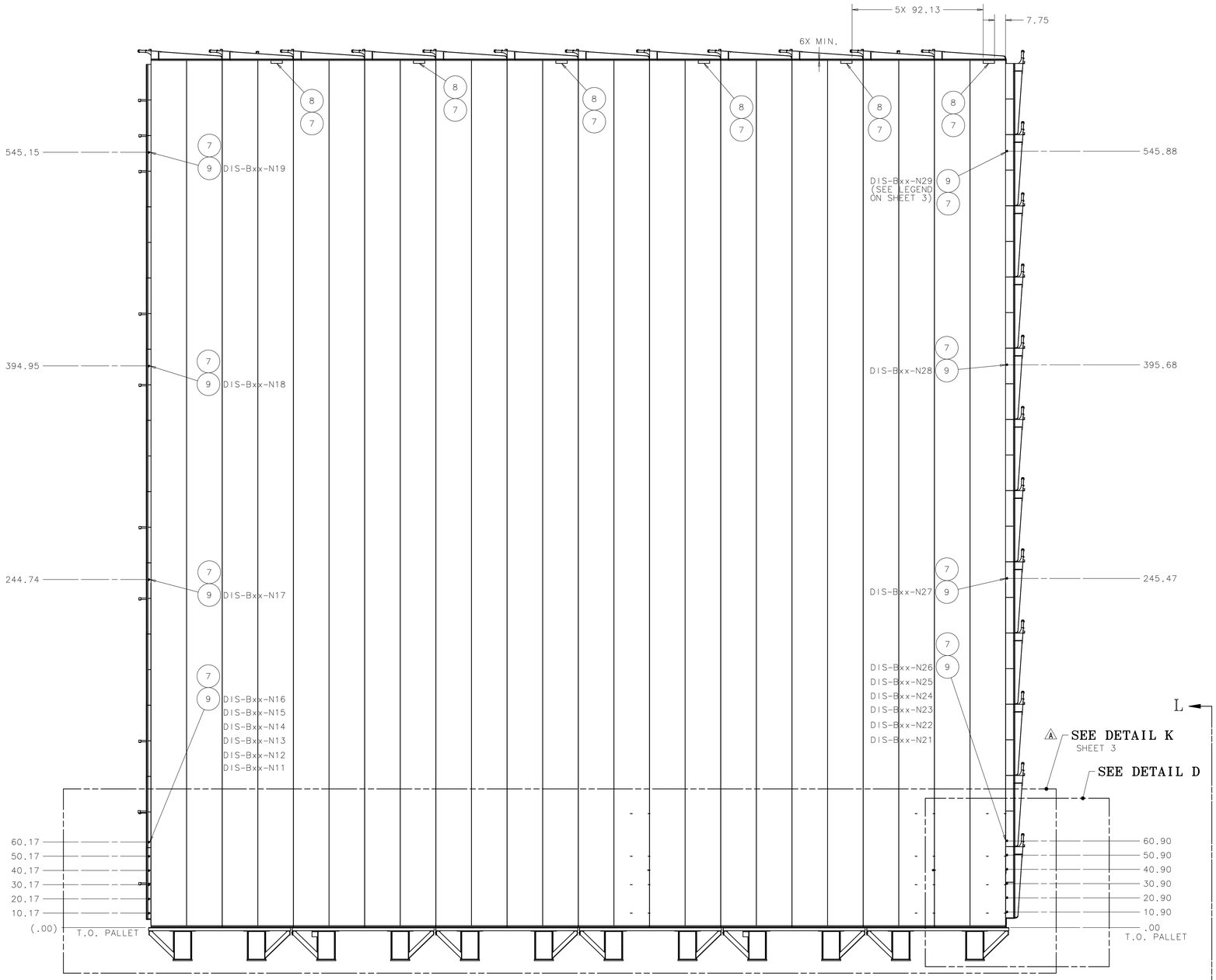

VIEW A–A
DOWNSTREAM VIEW
NORTH ELEVATION
SCALE: 1:32

NOTICE: IMAGE OBTAINED FROM FERMILAB WEB SITE
This information is provided for REFERENCE use only.
Not for MANUFACTURE, or DESIGN INFORMATION.
All information contained in this document represents work sponsored by an agency of the U.S. Government.
Neither the U.S. Government nor any agency thereof, nor Universities Research Association, Inc., nor any of their employees or officers, makes any warranty, express or implied, or assumes any legal liability or responsibility for the accuracy, completeness, or usefulness of any information, apparatus, product or process disclosed, or represents that its use would not infringe privately owned rights.

UNLESS OTHERWISE SPECIFIED			ORIGINATOR	T.MIAO	23-MAY-2012
.XX	.XXX	ANGLES	DRAWN	D.FRIEND	23-MAY-2012
± .12	± .060	± ---	CHECKED	J.RAUCH	29-MAY-2012
1. BREAK ALL SHARP EDGES MAX.			APPROVED	P.LUKENS	04-JUN-2012
2. DO NOT SCALE DRAWING. 3. DIMENSIONS BASED UPON ASME Y14.5M-1994 4. MAX. ALL MACH. SURFACES			USED ON		
5. DRAWING UNITS: U.S. INCH			MATERIAL	SEE PARTS LIST ABOVE	

FERMI NATIONAL ACCELERATOR LABORATORY
UNITED STATES DEPARTMENT OF ENERGY

NOVA–FAR_DETECTOR
FAR DETECTOR
BLOCK ASSY INSTRUMENTATION

SCALE	DRAWING NUMBER	SHEET	REV
1:32 & AS NOTED	3929.330–ME–489571	2 OF 1	A
CREATED WITH : Ideas12NXSeries		GROUP: PPD/MECHANICAL DEPARTMENT	

REV	DESCRIPTION	DRAWN	DATE
		APPROVED	DATE

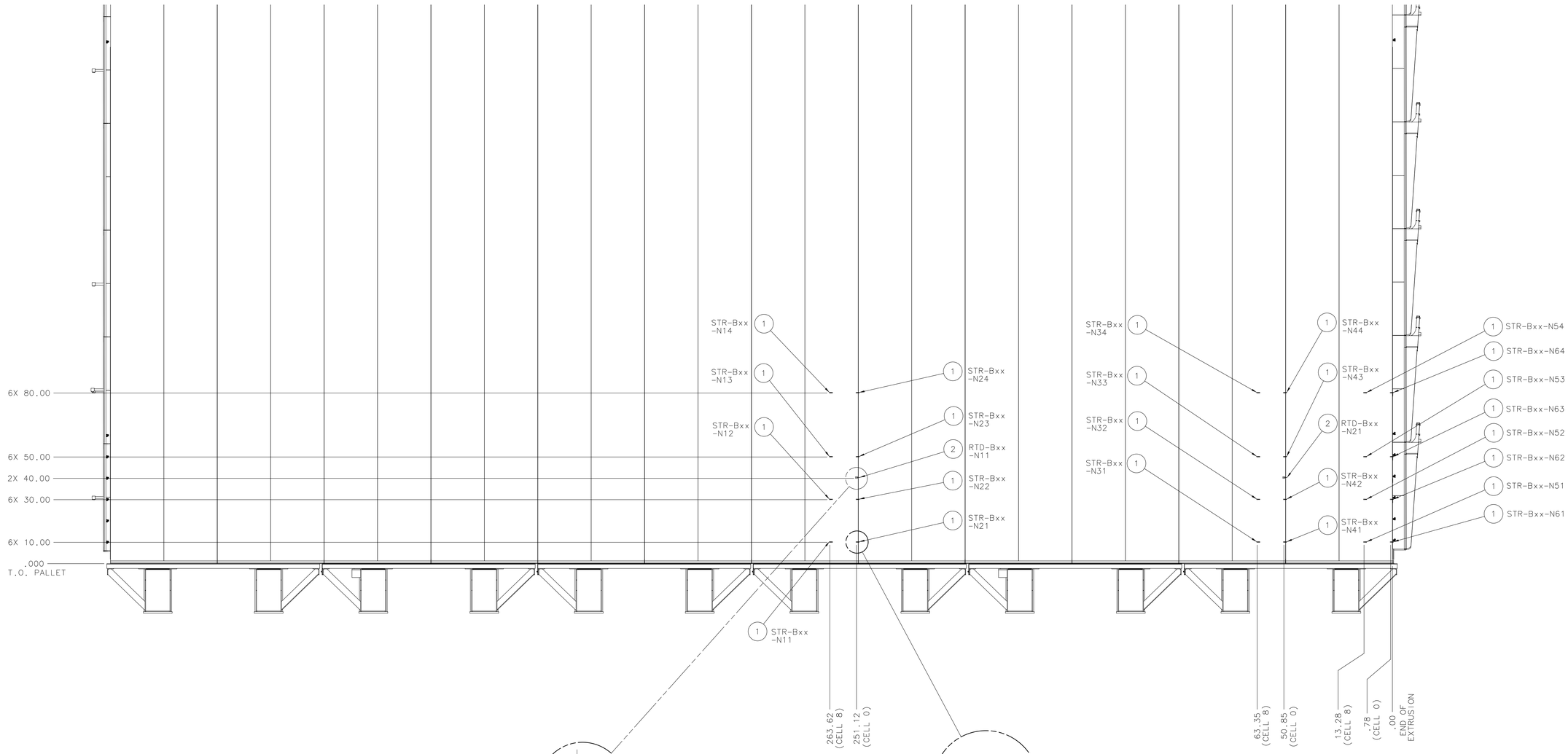

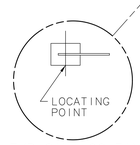

TYPICAL LOCATING POINT IN THIS ELEVATION
SCALE: NONE

DETAIL K A

STRAIN GAUGE AND RTD LOCATING VIEW
NORTH ELEVATION
(SEE B.O.M. ON THIS SHEET)
SCALE: NONE

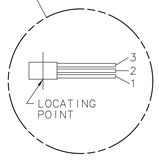

TYPICAL LOCATING POINT IN THIS ELEVATION
SCALE: NONE

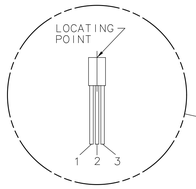

TYPICAL LOCATING POINT IN THIS ELEVATION
SCALE: NONE

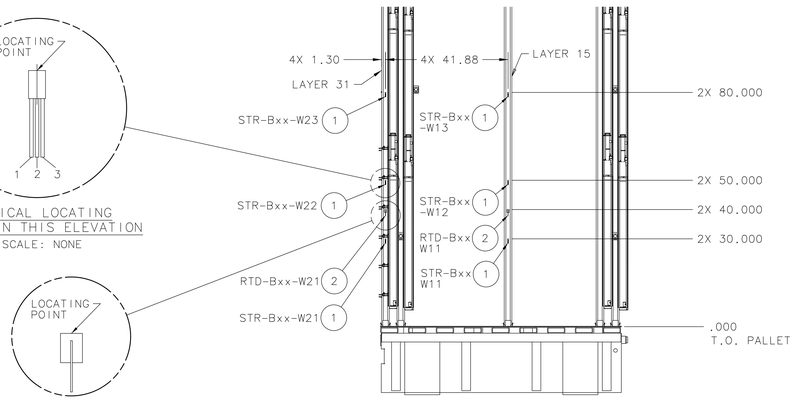

TYPICAL LOCATING POINT IN THIS ELEVATION
SCALE: NONE

VIEW L-L A

STRAIN GAUGE AND RTD LOCATING VIEW
WEST ELEVATION
(SEE B.O.M. ON THIS SHEET)
SCALE: NONE

LEGEND

EXAMPLE

A X STR-Bxx-N61

- INSTRUMENT NUMBER
- BLOCK NUMBER
- INSTRUMENT TYPE
- ITEM NUMBER

ITEM	PART NO.	DESCRIPTION OR SIZE	QTY.
2	COML	RTD, OMEGA P/N SA1-RTD-4W	4
1	COML	STRAIN GAUGE, VISHAY MICRO-MEASUREMENTS P/N CZA-30-125LR-350/C	30

A PARTS LIST

UNLESS OTHERWISE SPECIFIED			ORIGINATOR	T.MIAO	23-MAY-2012
.XX	.XXX	ANGLES	DRAWN	D.FRIEND	23-MAY-2012
± .12	± .060	± ---	CHECKED	J.RAUCH	29-MAY-2012
			APPROVED	P.LUKENS	04-JUN-2012

1. BREAK ALL SHARP EDGES MAX.
2. DO NOT SCALE DRAWING.
3. DIMENSIONS BASED UPON ASME Y14.5M-1994
4. MAX. ALL MACH. SURFACES
5. DRAWING UNITS: U.S.INCH

USED ON

MATERIAL
SEE PARTS LIST ABOVE

FERMI NATIONAL ACCELERATOR LABORATORY
UNITED STATES DEPARTMENT OF ENERGY

NOVA-FAR_DETECTOR
FAR DETECTOR
BLOCK ASSY INSTRUMENTATION

SCALE	DRAWING NUMBER	SHEET	REV
1:32 & AS NOTED	3929.330-ME-489571	3 OF 1	A

CREATED WITH : Ideas12NXSeries GROUP: PPD/MECHANICAL DEPARTMENT

NOTICE: IMAGE OBTAINED FROM FERMILAB WEB SITE
This information is provided for REFERENCE use only.
Not for MANUFACTURE, or DESIGN INFORMATION.
All information contained in this document represents work sponsored by an agency of the U.S. Government.
Neither the U.S. Government nor any agency thereof, nor Universities Research Association, Inc., nor any of their employees or officers, makes any warranty, express or implied, or assumes any legal liability or responsibility for the accuracy, completeness, or usefulness of any information, apparatus, product or process disclosed, or represents that its use would not infringe privately owned rights.