Michigan State University Fiber Loop Transmission QA device

Enrique Arrieta-Diaz, Carl Bromberg, Ron Richards, Dean Shooltz[1], and Barry Tigner
Michigan State University
May 28, 2012

Table of Contents

Introduction……..1
Operating procedure…….2
Gain adjustment……2
Sample data……..3
Calibration……..……4
Maintenance……...……..4
Fiber bending technique……..…...4
Mechanical specifications.…….....6
Schematics……...…27
Firmware listing……...30

Introduction

The Michigan State University Fiber Loop Transmission (FLT) QA device pumps red light into one end of each of 32 fiber loops in a NOvA module and measures the light received from the other end. The FLT is modular with a light router, an array of red light-emitting diodes (LED) and phototransistors (PT), and a control board, seen in the expanded assembly drawing

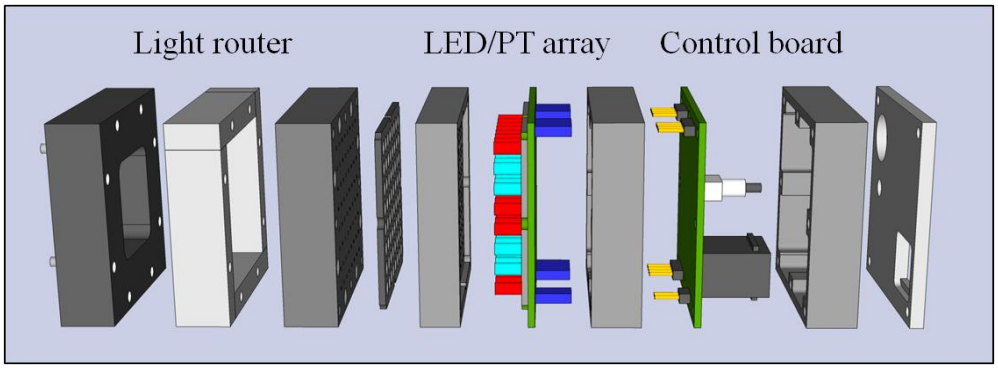

Fig. 1. Expanded assembly of the MSU Fiber Loop Transmission (FLT) QA device.

shown in Figure 1. The light sources are 32 red LEDs while the light receptors are 32 phototransistors. A clear fiber light router, as shown during its construction in Figure 2, has 32 clear fiber pairs glued into a faceplate and then polished. The pattern of fiber pairs matches the end pattern of 32 WLS fiber loops in a NOvA module. The clear fibers are glued into a back plate and polished. The pattern of the fibers in the back plate of the router matches that of the LED and PT array. The severe bending of the light pipe fibers results in a wide range of intrinsic transmission. To compensate for the large variation in the intrinsic transmission through the light router, a thin filter was inserted between the light router and the LED/PT array for the straighter fibers. This leveled the overall response of each channel within about a factor of two. The faceplate has two pins that align its fiber pattern to that of the NOvA module fiber connector.

[1] Shooltz Solutions LLC, 13620 Turner Road, Dewitt, Michigan 48820-8126

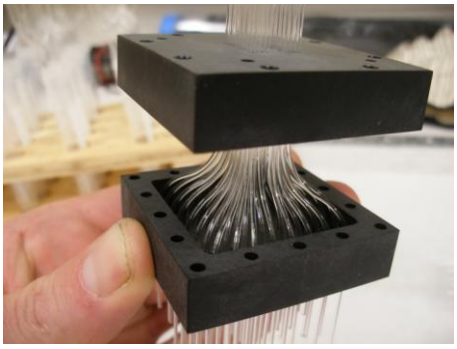

Fig. 2. Photo of light router during construction

One member of each clear fiber pair is routed to its own LED and the other member is routed to its own phototransistor. The transistor outputs are connected in parallel and feed the total current to a single ADC. Thus the current signal readout by the ADC is the sum of the currents produced by all 32 phototransistors. The phototransistors are very quiet and in parallel produce a dark current measurement of just a few counts on the 10-bit ADC. A signal seen above the dark current is due to light from a single red LED piped through the corresponding WLS fiber loop of the NOvA module and received by the corresponding phototransistor in the FLT. The LED and phototransistor arrays are isolated from each other by a black foam gasket. A "cross talk" where direct light from an LED is picked up by a neighboring PT, has not been observed.

When the trigger button is pressed each LED is fired in sequence with the ADC level readout through a custom programmable dongle. The program was adjusted to match the requirements of the Minnesota module factory, but can be customized for other users if required. A total of ten units were constructed. At present, there are four units at the Minnesota module factory, two at Ash River, and one at UM Crookston.

Operating procedure

Ensure that the FLT device is able to transmit data through the interface dongle and to the attached computer. The dongle contains an RS232 to USB converter, and instructions for setting up a variety of operating systems are available online (www.ftdichip.com). The communications should be set for 9600 baud, no parity, 8 bits, 1 stop bit, and no handshaking. Ensure that the face of the FLT device and the face of the module connector are free from debris. Engage the two alignment pins on the face of the FLT with the holes in the module connector. Carefully rotate the FLT into a position where the face of the FLT and the face of the module fiber connector are parallel and in contact. Using light pressure, hold the FLT in position and press the trigger button. After a short tone sequence, the FLT will sequentially scan the fiber loop channels and transmit the ADC readings through the dongle to the attached computer. After the measurement cycle is completed it is very important to disengage the pins from the module by rotating the FLT away from the alignment pins. If the FLT is rotated in any other direction the alignment pins may jam in the alignment holes, thus risking damage to the module connector. It may be beneficial to perform duplicate measurements on modules to develop confidence in the data.

Gain adjustment

The 10-bit ADC in the FLT does not have enough range to provide reasonable measurements for both short and long NOvA modules. To overcome this limitation an adjustable gain is provided. By removing the back cover of the FLT a 10 turn 100K trimpot controlling the gain can be accessed. The gain can be easily set by performing a series of measurements of a NOvA module with the rear cover removed (the optoelectronics, by design, are shielded from ambient light, even without this cover) and by visualizing the data in real-time in a terminal

program on the attached computer. The gain should be set to produce nominal measurements of around 800 ADC counts maximum value. After adjusting the gain, it is important to tap the trimpot lightly with a tool to mechanically settle the resistance. If an FLT is to be used exclusively on NOvA modules of a particular length it may be beneficial to disconnect the trimpot leads and install a fixed metal-film resistor of the proper value. Such a resistor should improve gain stability with respect to mechanical shock (dropping the FLT) and variations in temperature and humidity.

Sample Data

At the October 2011 NOvA collaboration meeting in Minneapolis four units adjusted for use on NDOS modules were given an operational test. Twenty NDOS modules rejected for various reasons were tested in less than 30 minutes. For each channel of the FLT (and of the NOvA modules) the raw data was strongly peaked around a mean with typical variations of about 10%, except for a few channels which show abnormally low outputs, as shown in Figure 3. In

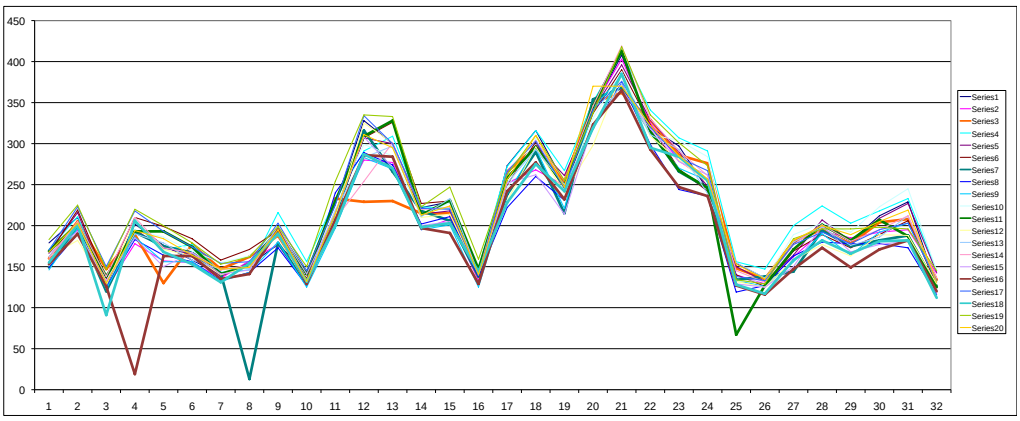

Fig. 3. Raw ADC counts for each of 32 channels in twenty NDOS modules

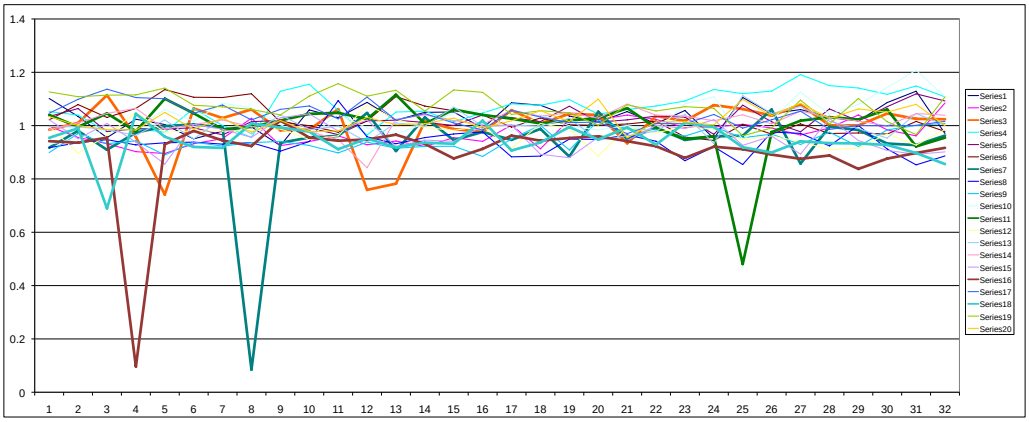

Fig. 4. Response of each channel relative to the mean in twenty NDOS modules

order to show the response relative to the average, channels with a response less than 80% of the mean of the remainder were removed from the average. The ratio of the response of each channel relative to the mean was then calculated as shown in Figure 4. Five modules show a single fiber exhibiting a transmission less than 80% of the average, and one module shows two fibers with a transmission just below the 80% mark.

Calibration

We are of the opinion that the best calibration of the FLT that one can obtain is to use a group of modules (say 20) believed to be constructed properly and average their transmission as shown above. Then one (or more) of these modules should be selected, stored permanently, and the transmission relative to the average for this "standard" module used as a calibration. Each FLT should be calibrated in this way to the standard. On a regular basis each FLT should be tested against this standard module. If an FLT gets damaged its measurements of the standard module would show a changed (up or down) transmission, while the other units would not show this change. With four FLT devices at the module factory and two (or three) at Ash River, the damaged unit should stand out relative to the others. If the damage is slight and not increasing, with more frequent checking, this unit could be recalibrated relative to the standard module and its use continued, or returned to MSU for repair if possible.

Two situations will be more difficult to diagnose. If the transmission of the standard module changes due to an aging effect, all four FLT units would show lower transmission. An alternative interpretation would be that the four FLT units were degrading simultaneously. We don't believe that the FLT devices will show any aging effects. Certainly newly constructed modules will not exhibit this aging effect and should allow a breaking of the degeneracy in the interpretation. Degradation over time for the transmission of fiber in a module maintained in a laboratory environment would be a very serious problem for the experiment.

Maintenance

The FLT QA device should require little or no maintenance over the lifetime of the NOvA module production. The polished face of the fiber array can be occasionally cleaned with a soft, clean cloth and methanol or isopropanol alcohol. Harsher solvents such as acetone must be avoided. It is expected that the polished face of the fiber array will accumulate some wear with use, and this should be accounted for by occasional calibration as discussed above. There is no need to disassemble the FLT beyond removal of the back aluminum cover for gain adjustment. If the FLT is further disassembled a recalibration will be required. The fiber light router should never be disassembled for any reason. The two alignment pins on the face of the fiber array should last for the lifetime of the device; however, the pins are replaceable and a spare set of holes are provided.

Fiber bending technique

The design goal of a compact and modular FLT device required a compact fiber router, which in turn required severely bent fibers. We have developed a simple and robust technique for bending fibers in a boiling water bath, as shown in figure 5. In this device a 1 mm diameter optical fiber (Bicron BCF-98) is suspended from a holder, passes between a pair of plastic rollers, and supports a 200 g mass. In

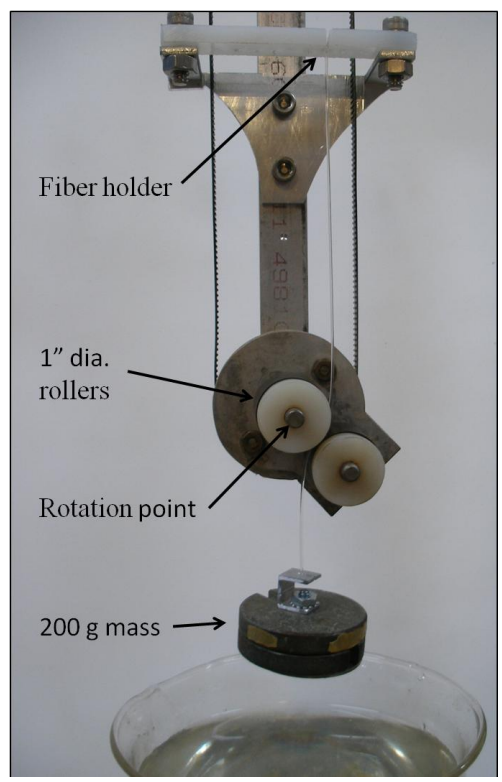

Fig. 5. Fiber bending apparatus

operation we submerge the apparatus in boiling water to a point above the rollers, wait 5 seconds, rotate the axis of the satellite roller around the axis of the hub roller over a period of a few seconds, wait 5 seconds, and raise the apparatus from the water bath, and finally wait another 10 seconds for the fiber to cool. Bent fibers show no visible damage and display an expected loss in optical transmission depending on the severity of the bend. No relaxation of the bend has been detected in bent fibers stored for six months.

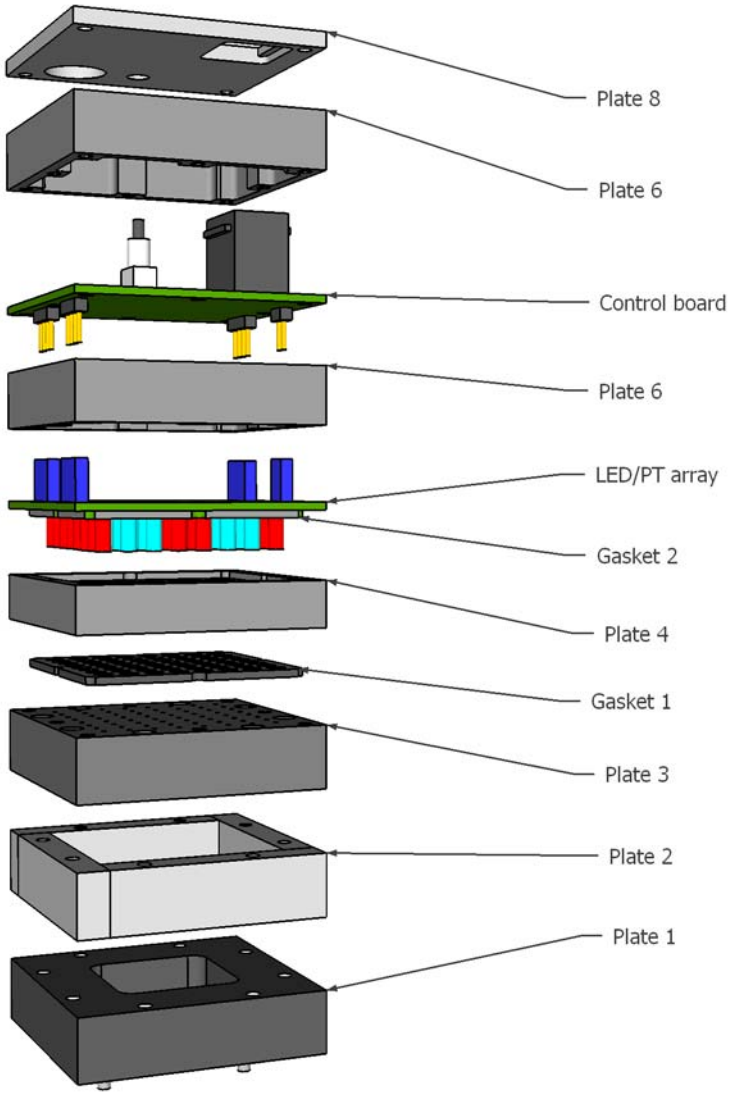
Plate 8
Plate 6
Control board
Plate 6
LED/PT array
Gasket 2
Plate 4
Gasket 1
Plate 3
Plate 2
Plate 1

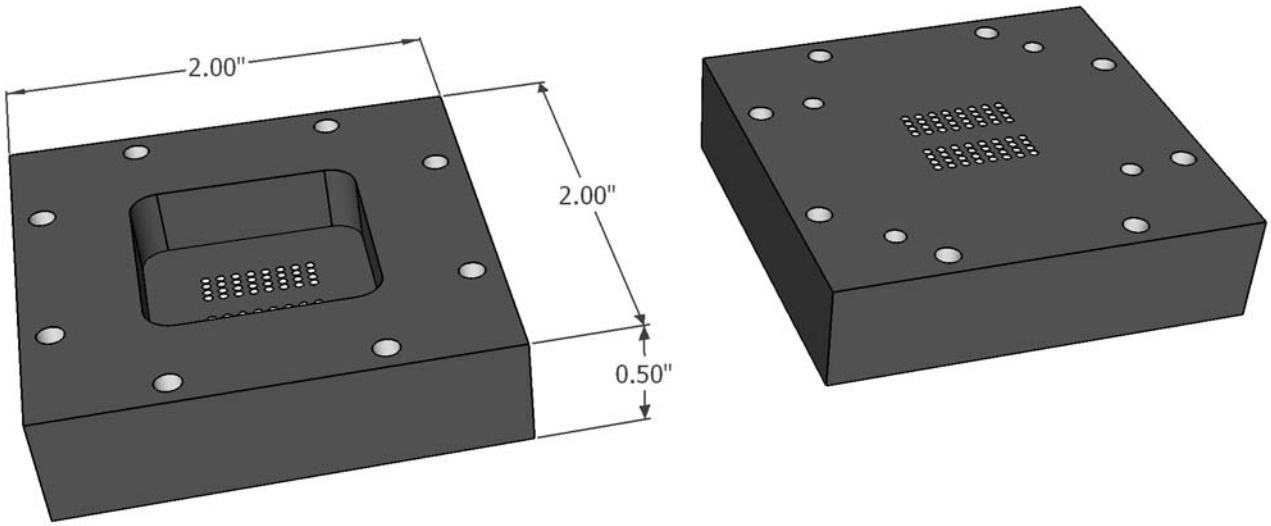

Michigan State University
Fiber Loop Transmission QA Device
Plate 1 drawing 1 of 4
Material: Black Delrin
All dimensions in inches

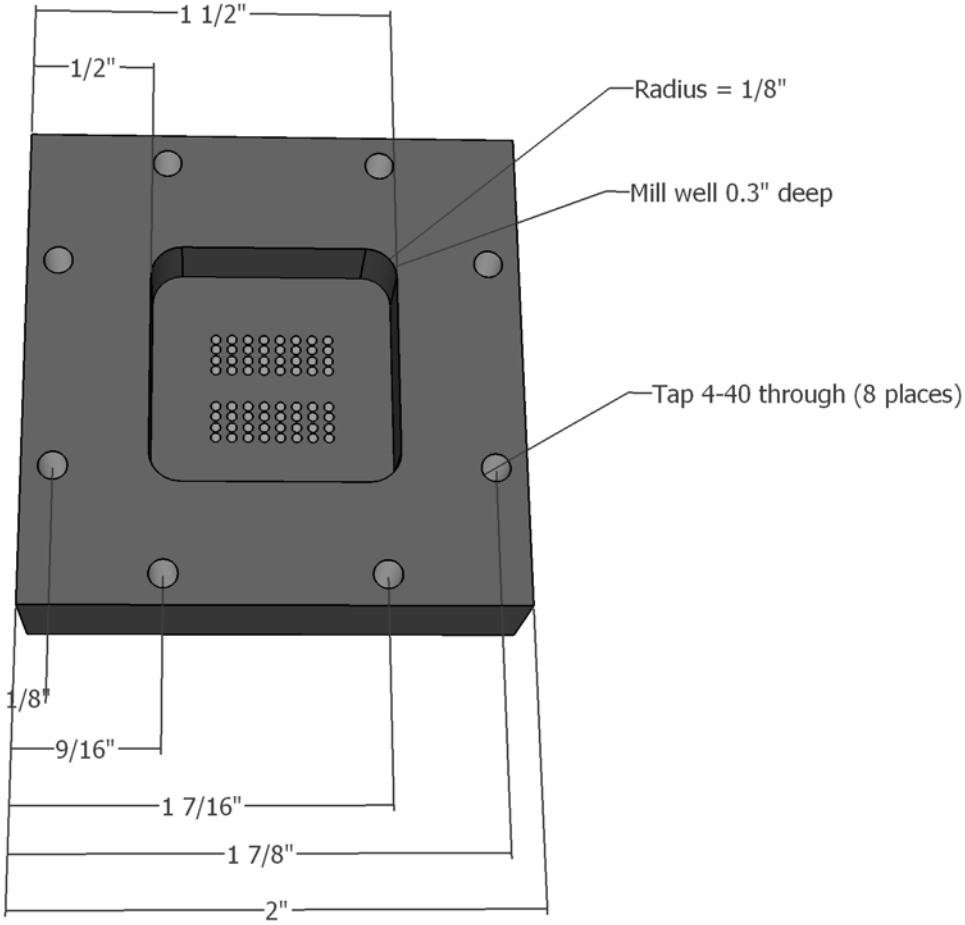

Michigan State University
Fiber Loop Transmission QA Device
Plate 1 drawing 2 of 4
Material: Black Delrin
All dimensions in inches

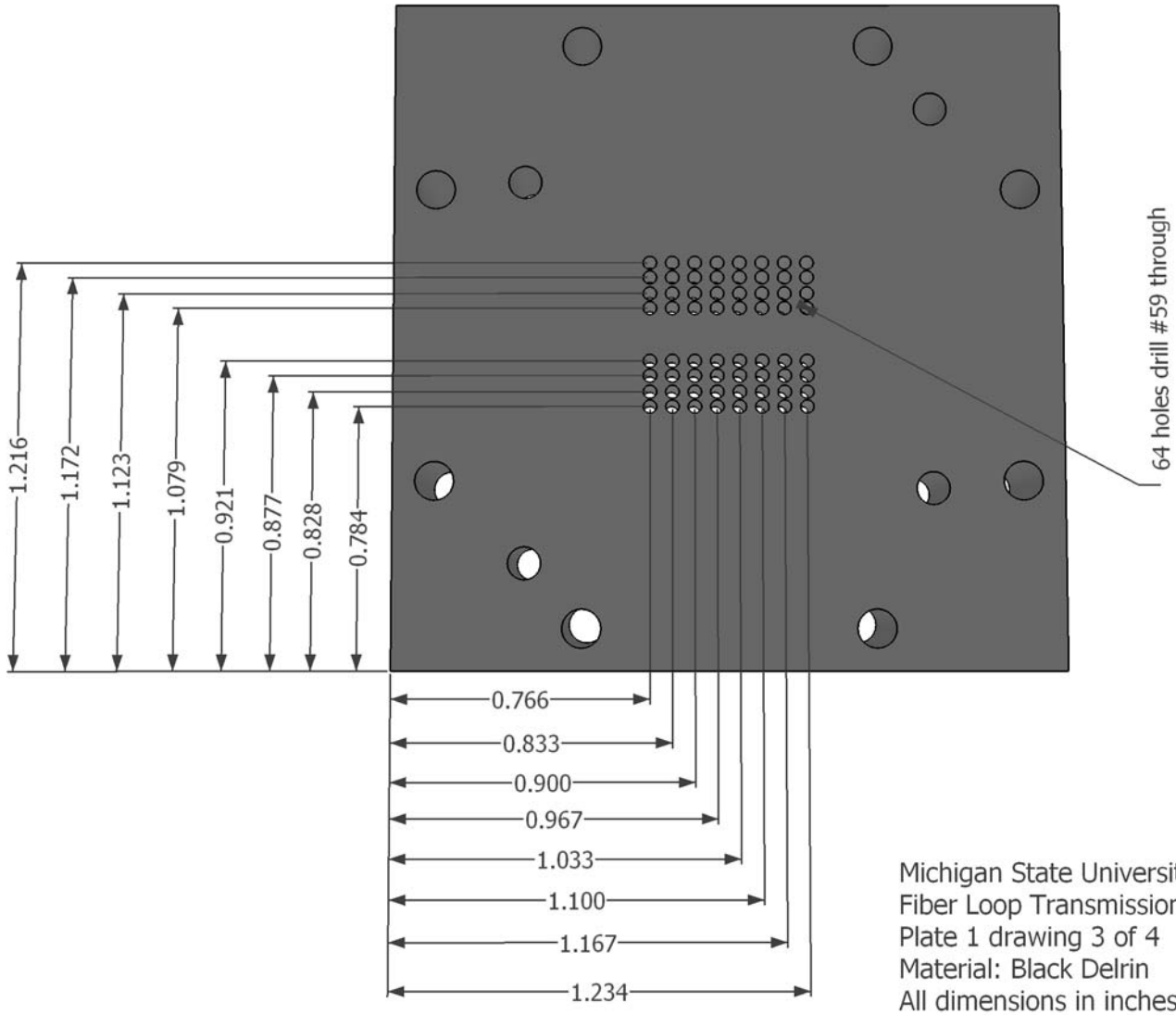

Michigan State University
Fiber Loop Transmission QA Device
Plate 1 drawing 3 of 4
Material: Black Delrin
All dimensions in inches

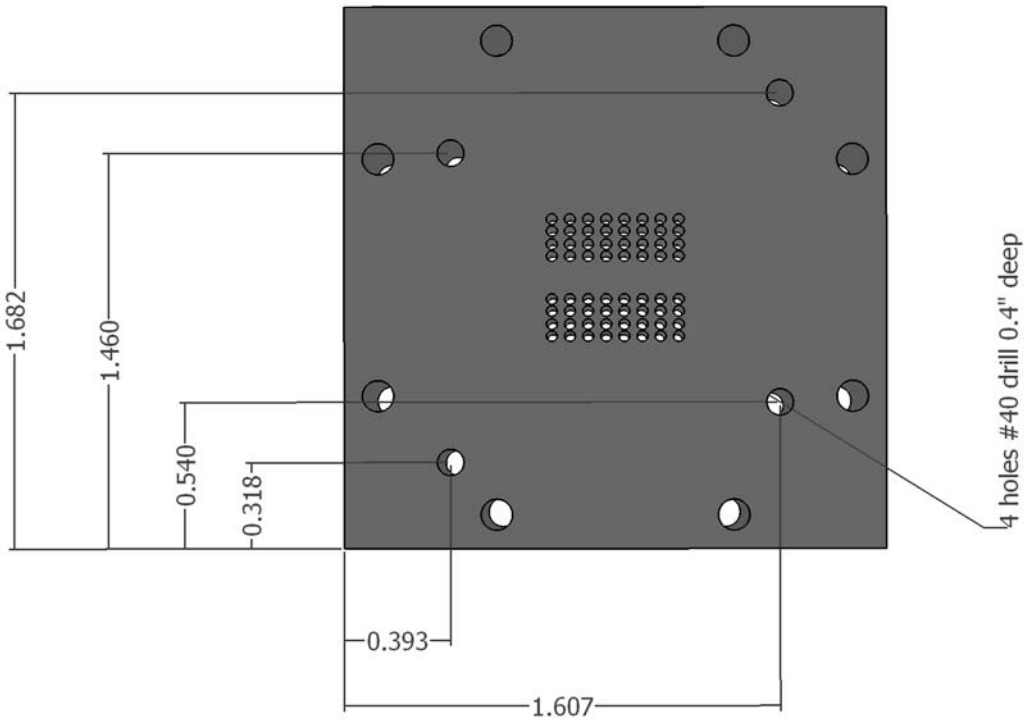

Michigan State University
Fiber Loop Transmission QA Device
Plate 1 drawing 4 of 4
Material: Black Delrin
All dimensions in inches

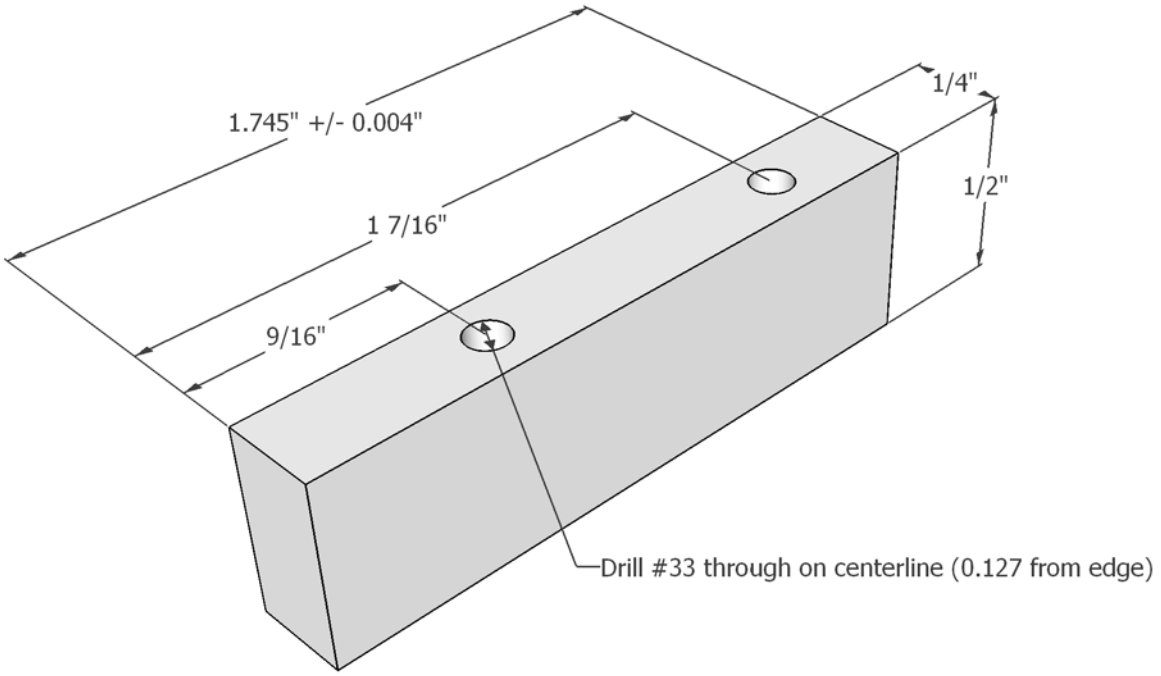

Michigan State University
Fiber Loop Transmission QA Device
Plate 2 drawing 1 of 1
Material: 6061 aluminum extrusion
All dimensions in inches

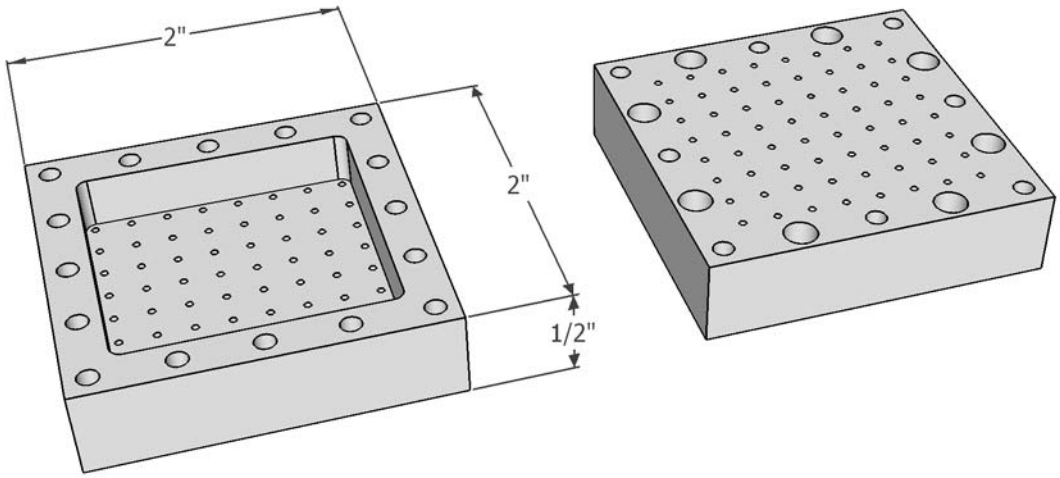

Michigan State University
Fiber Loop Transmission QA Device
Plate 3 drawing 1 of 5
Material: Black Delrin
All dimensions in inches

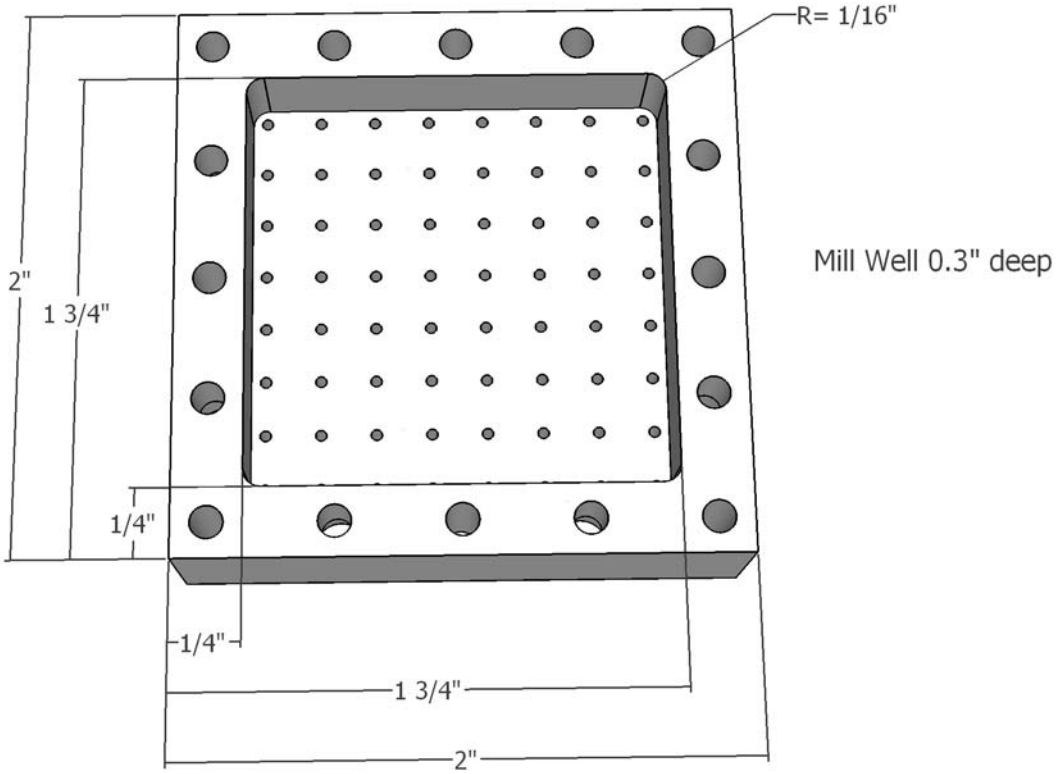

Michigan State University
Fiber Loop Transmission QA Device
Plate 3 drawing 2 of 5
Material: Black Delrin
All dimensions in inches

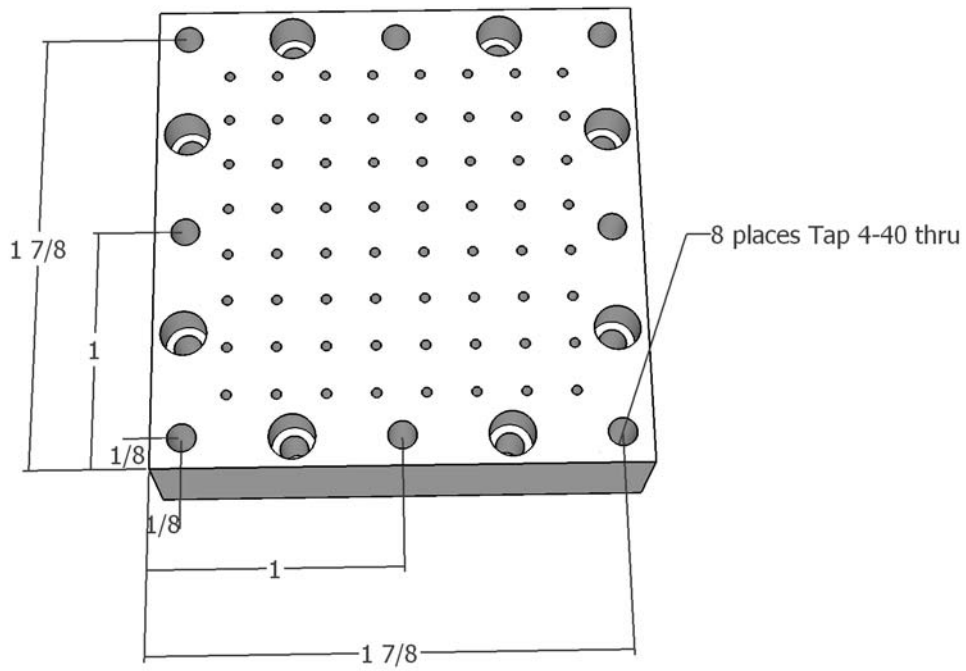

Michigan State University
Fiber Loop Transmission QA Device
Plate 3 drawing 3 of 5
Material: Black Delrin
All dimensions in inches

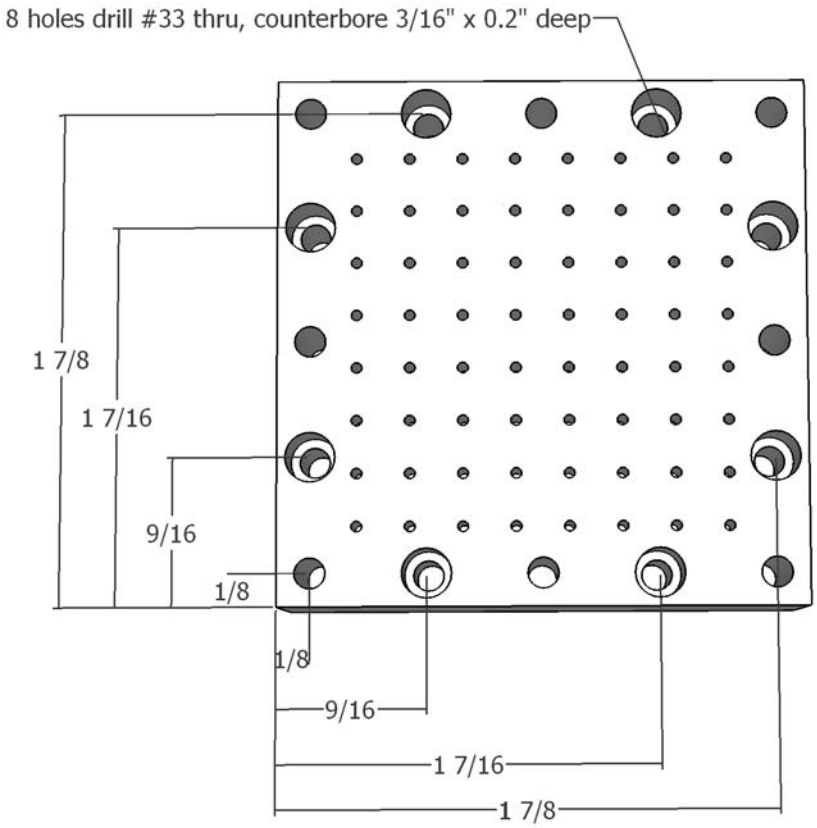

Michigan State University
Fiber Loop Transmission QA Device
Plate 3 drawing 4 of 5
Material: Black Delrin
All dimensions in inches

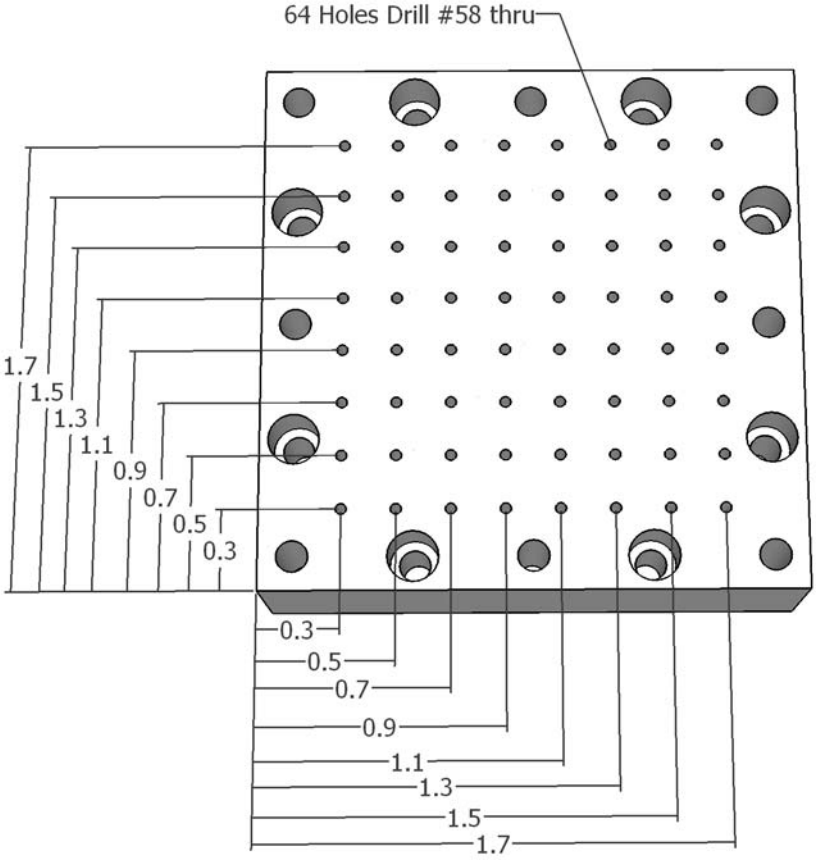

Michigan State University
Fiber Loop Transmission QA Device
Plate 3 drawing 5 of 5
Material: Black Delrin
All dimensions in inches

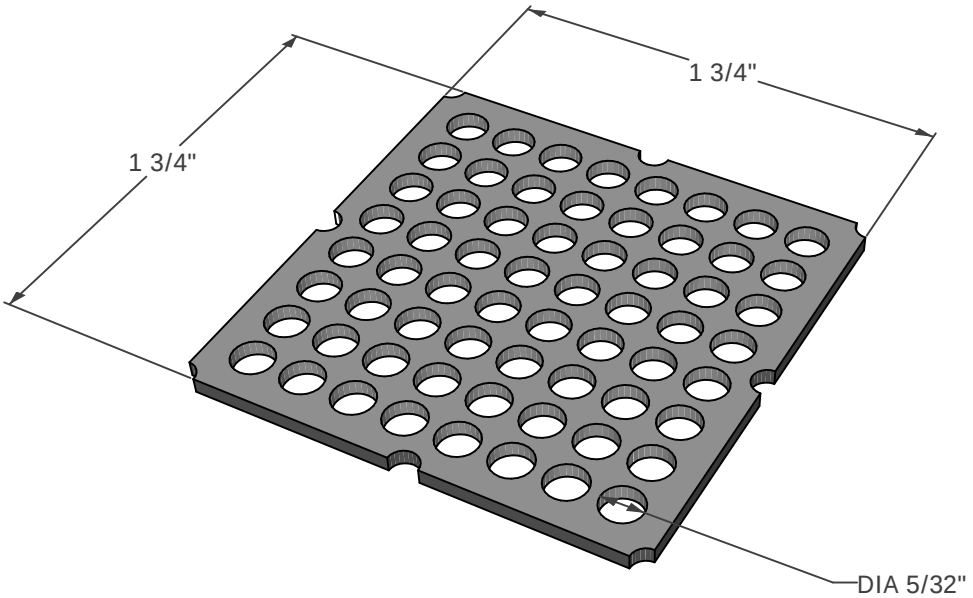

Michigan State University
Fiber Loop Transmission QA Device
Gasket set drawing 1 of 1
Material: Buna-N closed-cell foam rubber, blask, 1/16" uncompressed thickness
All dimensions in inches
Gasket 1: 64 holes 5/32" diamater and 8 partial holes matching Plate 4
Gasket 2: Omit 64 holes. LED and PT leads will puncture gasket material

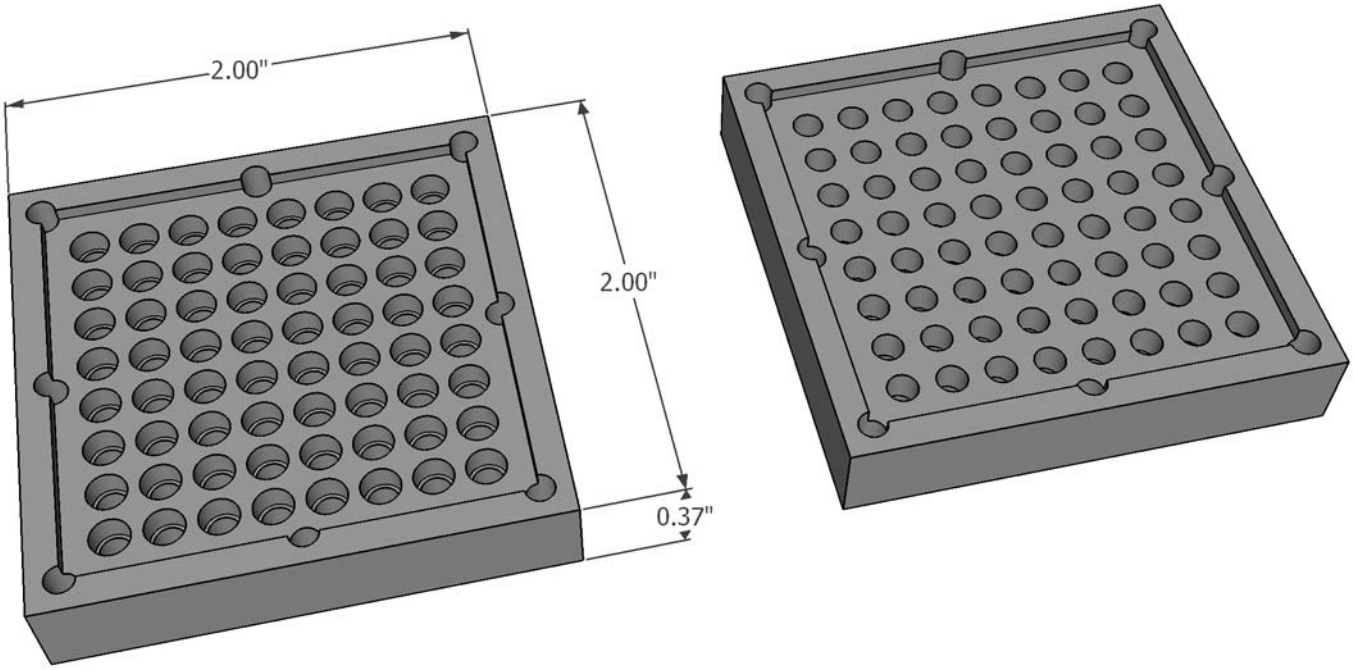

Michigan State University
Fiber Loop Transmission QA Device
Plate 4 drawing 1 of 4
Material: Black Delrin
All dimensions in inches

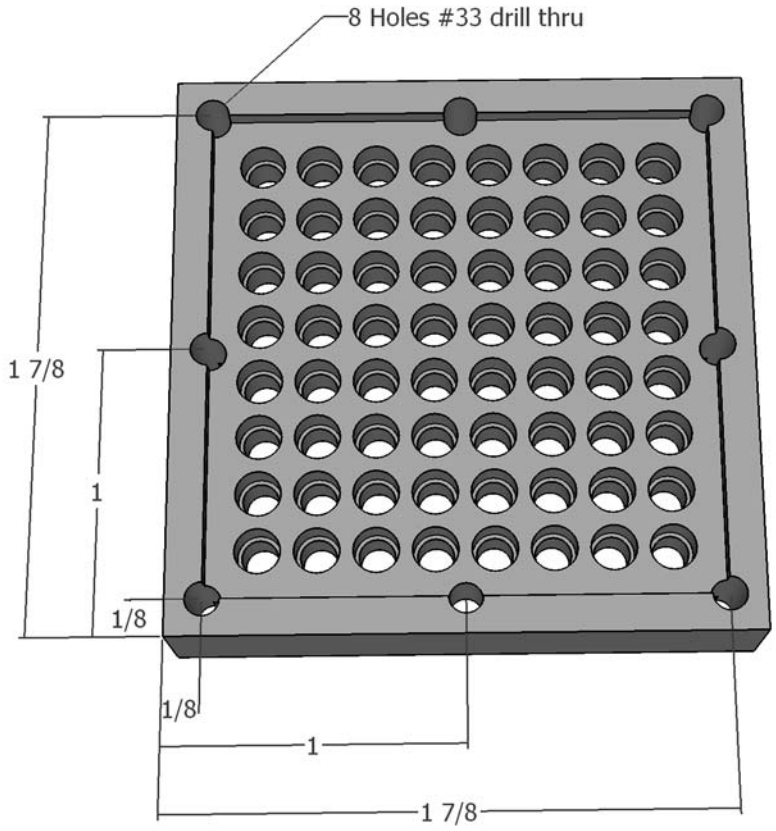

Michigan State University
Fiber Loop Transmission QA Device
Plate 4 drawing 2 of 4
Material: Black Delrin
All dimensions in inches

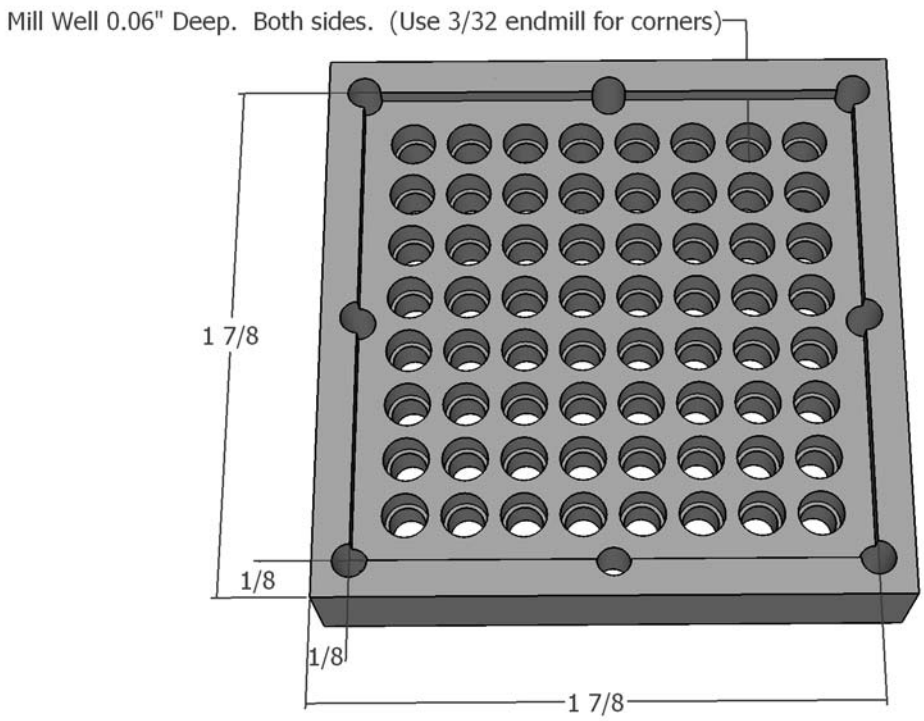

Michigan State University
Fiber Loop Transmission QA Device
Plate 4 drawing 3 of 4
Material: Black Delrin
All dimensions in inches

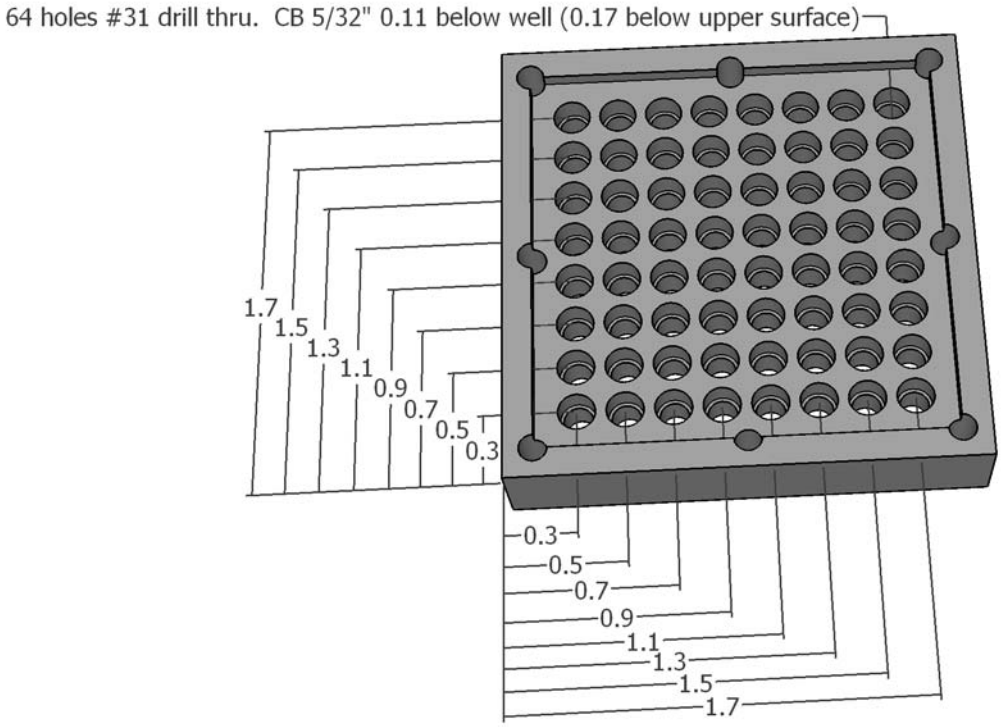

Michigan State University
Fiber Loop Transmission QA Device
Plate 4 drawing 4 of 4
Material: Black Delrin
All dimensions in inches

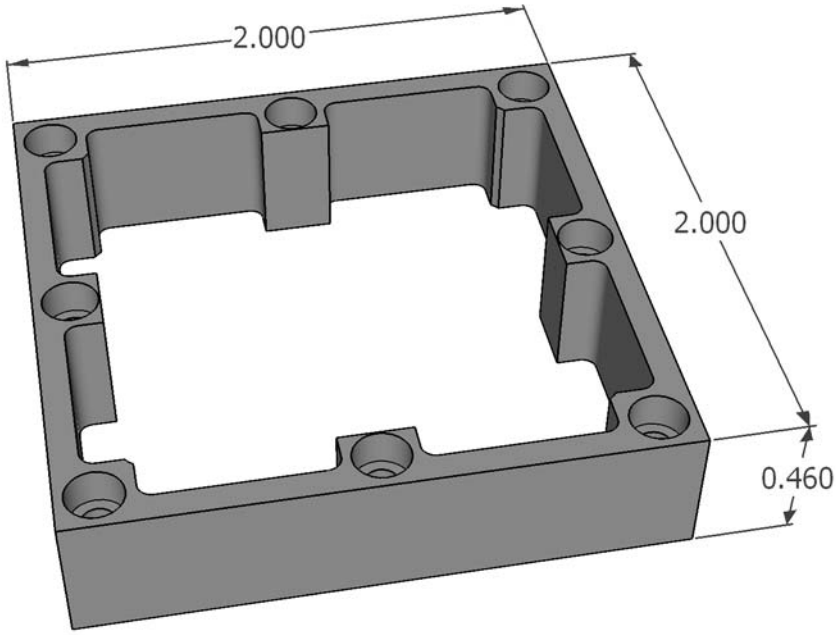

Michigan State University
Fiber Loop Transmission QA Device
Plate 6 drawing 1 of 3
Material: Black Delrin
All dimensions in inches

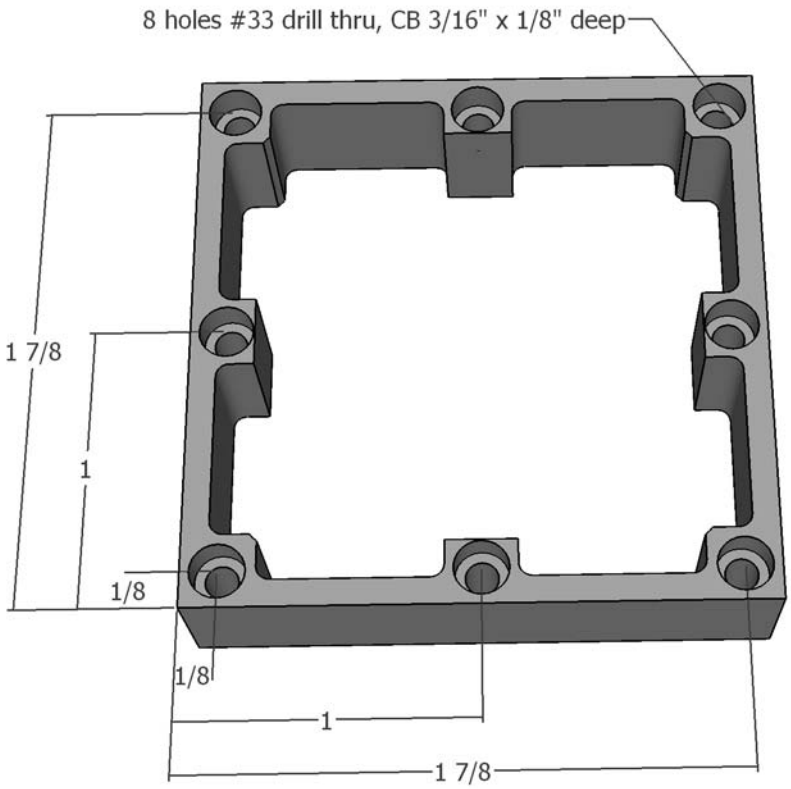

Michigan State University
Fiber Loop Transmission QA Device
Plate 6 drawing 2 of 3
Material: Black Delrin
All dimensions in inches

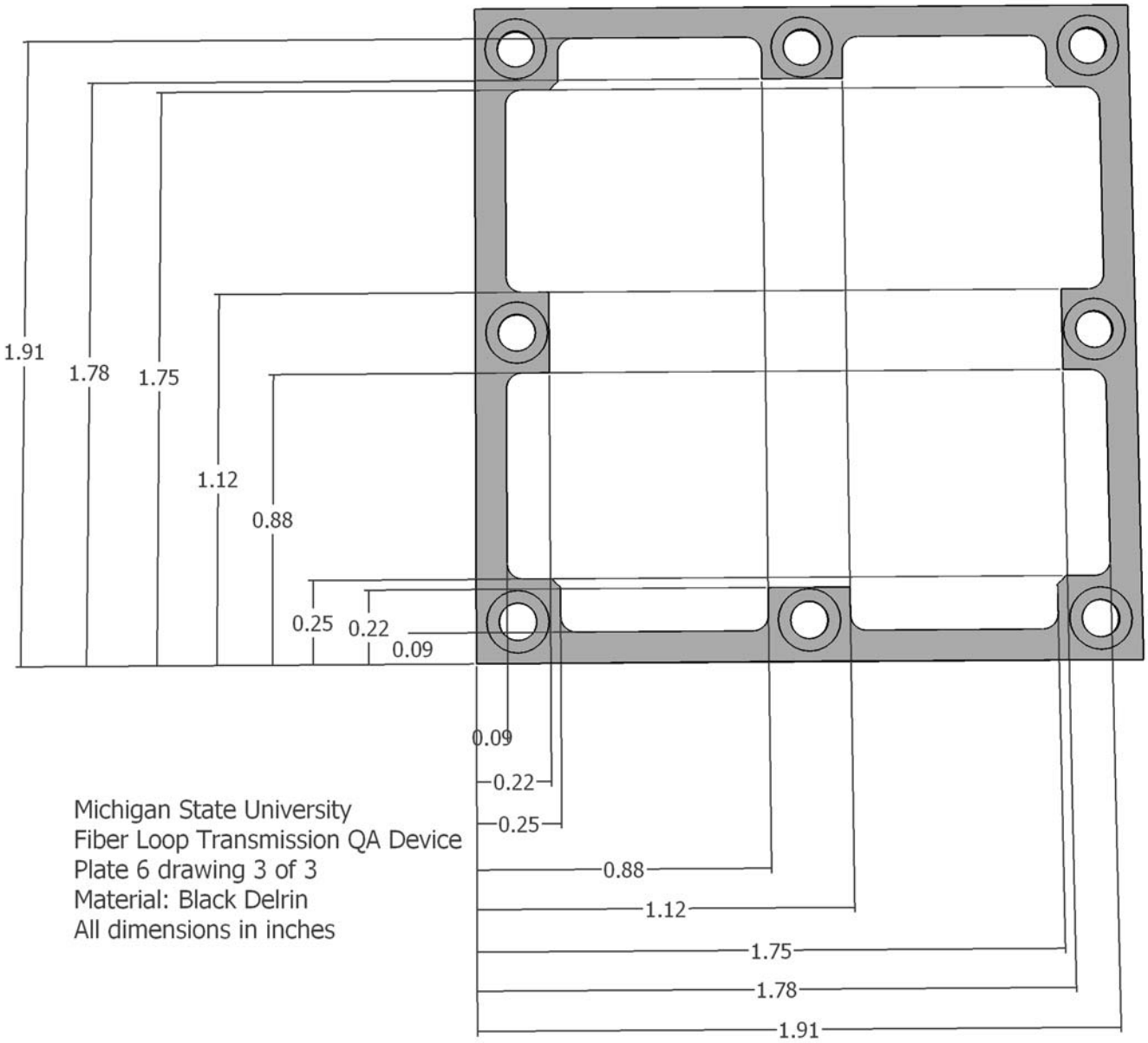
1.91
1.78
1.75
1.12
0.88
0.25
0.22
0.09
0.09
0.22
0.25
0.88
1.12
1.75
1.78
1.91
Michigan State University
Fiber Loop Transmission QA Device
Plate 6 drawing 3 of 3
Material: Black Delrin
All dimensions in inches

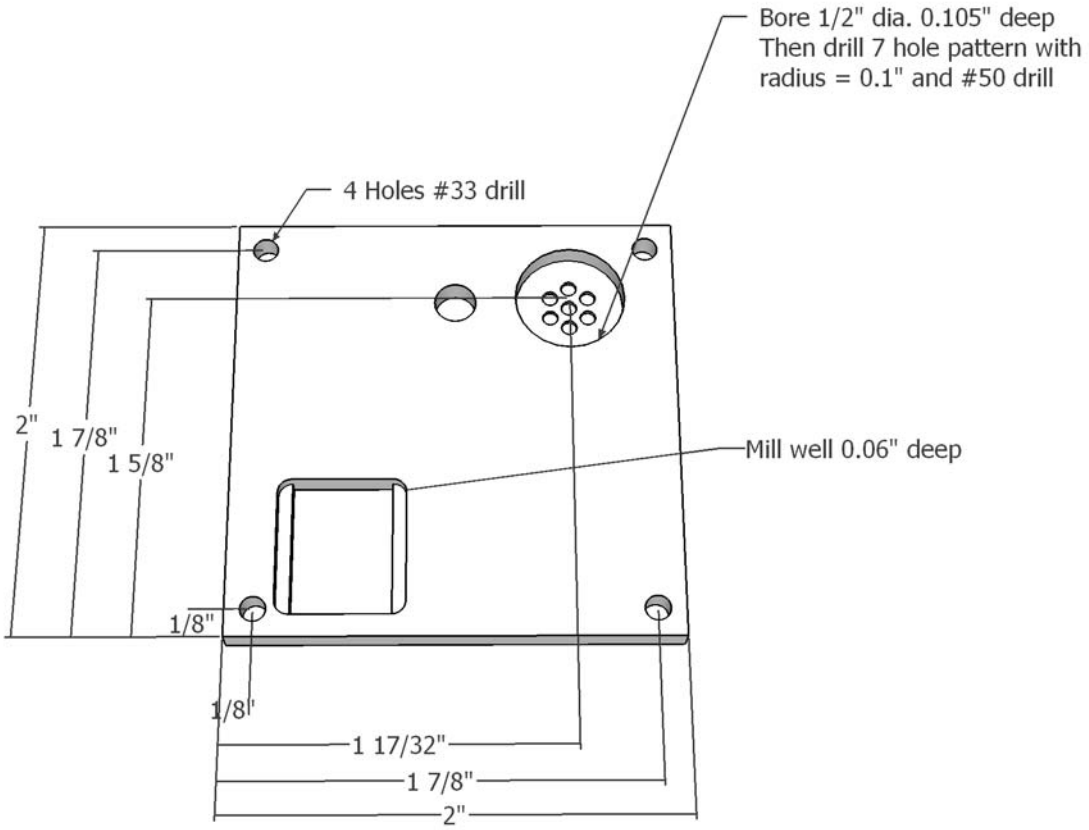

Michigan State University
Fiber Loop Transmission QA Device
Plate 8 drawing 1 of 2
Material: 6061 aluminum 1/8" thick plate
All dimensions in inches

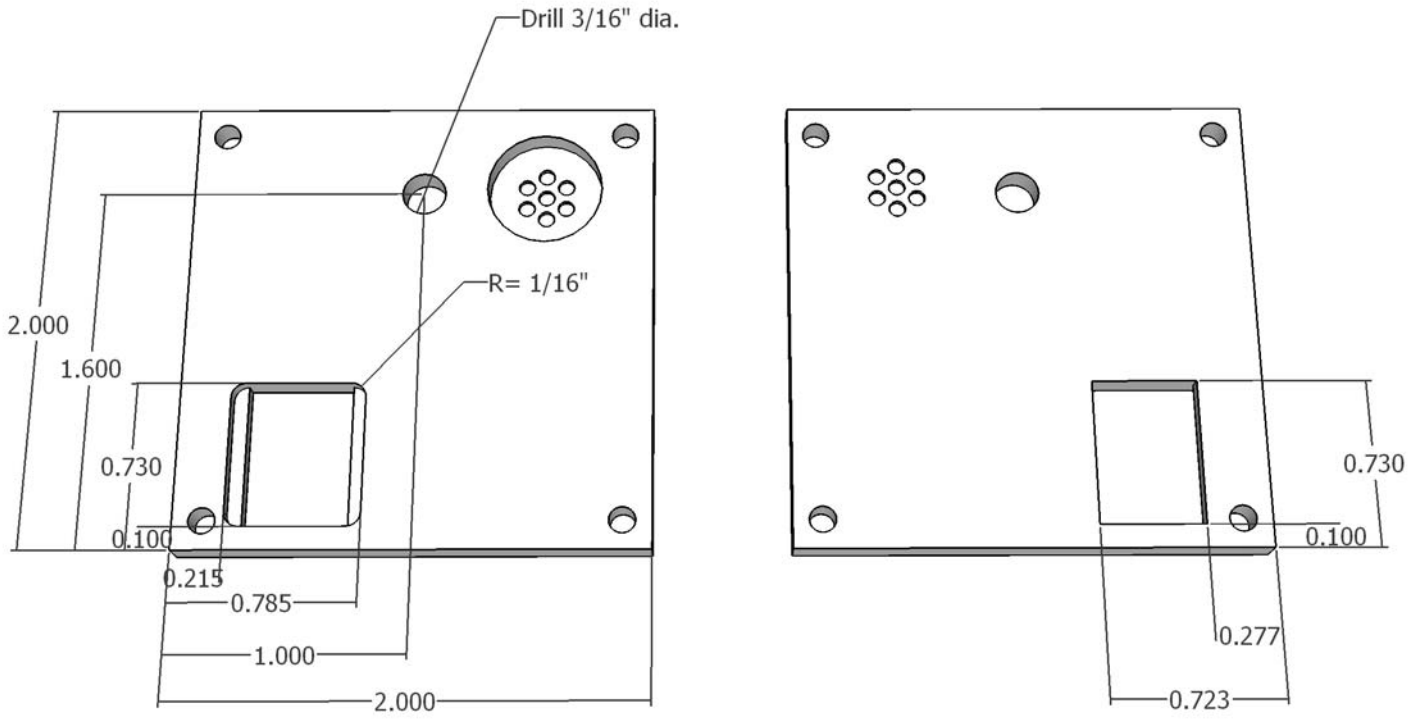

Michigan State University
Fiber Loop Transmission QA Device
Plate 8 drawing 2 of 2
Material: 6061 aluminum 1/8" thick plate
All dimensions in inches

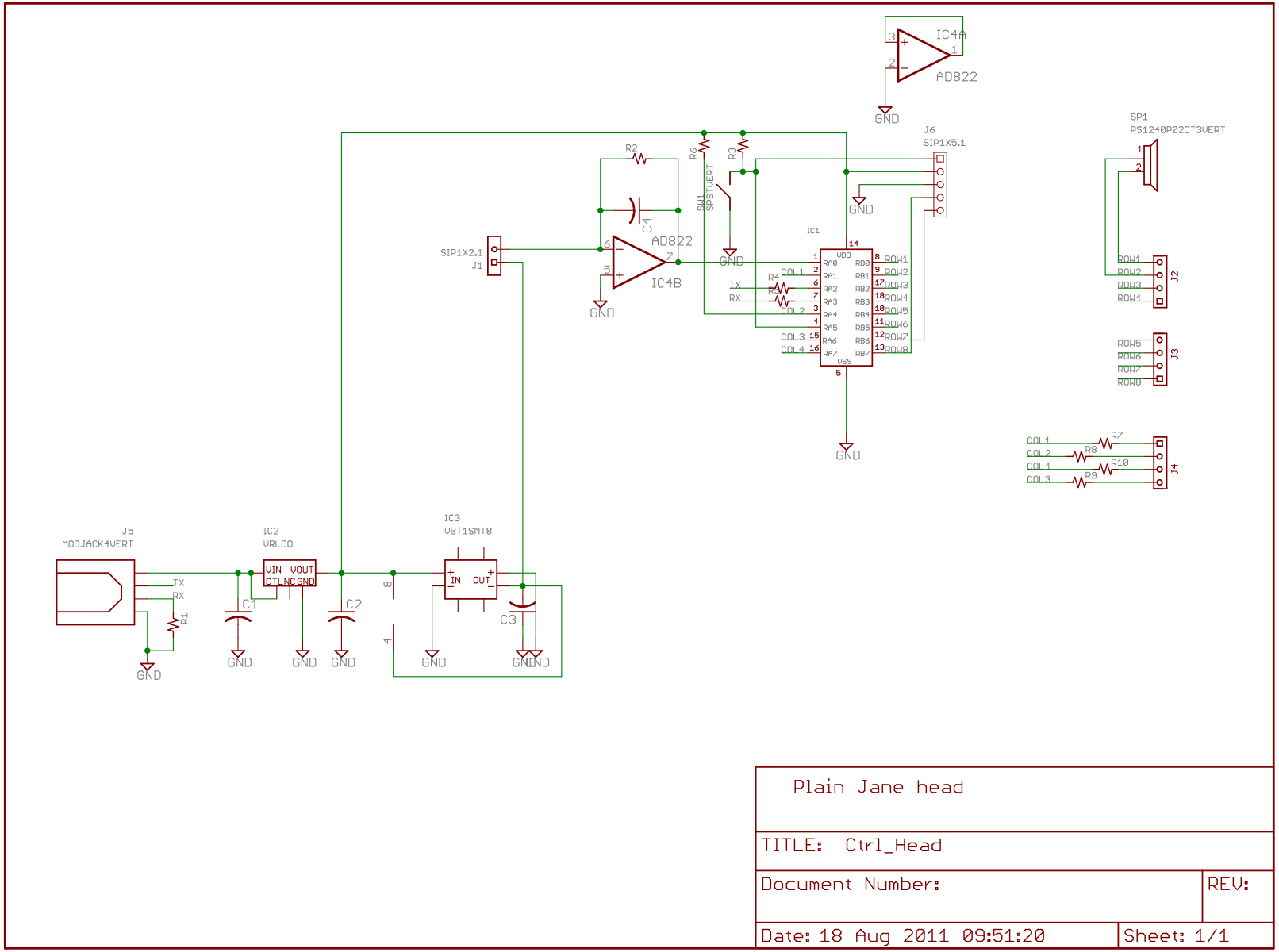

Plain Jane head

TITLE: Ctrl_Head

Document Number:

REV:

Date: 18 Aug 2011 09:51:20

Sheet: 1/1

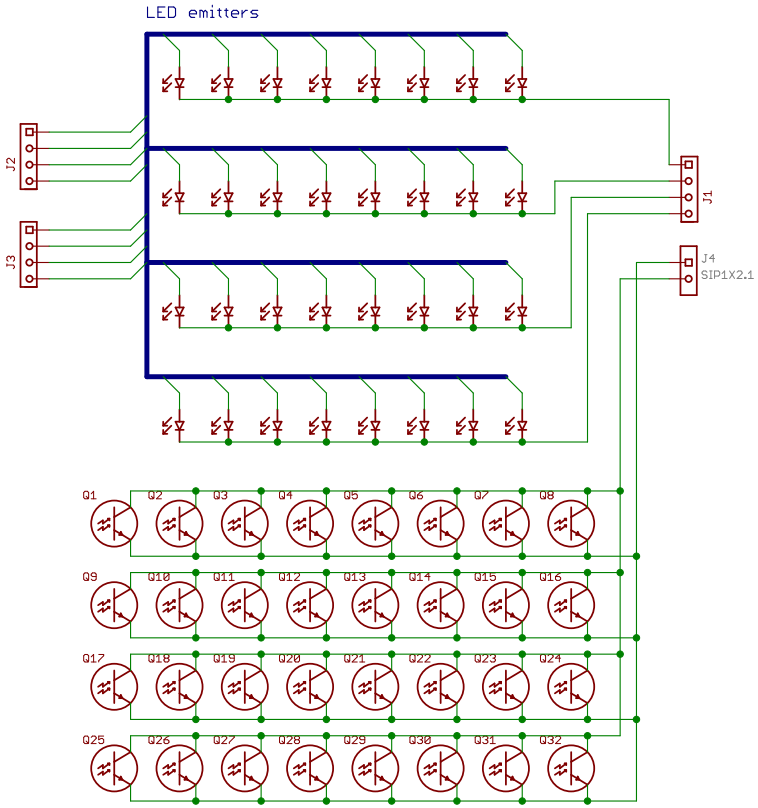

MSU PA Electronics Design
Designed by Barry A. Tigner

THIS DRAWING CONTAINS PROPRIETARY INFORMATION AND SHOULD NOT BE USED WITHOUT WRITTEN PERMISSION.

TITLE	REV
DATE 18 Aug 2011 09:47:14	DRG
FILE: Optical_Head	PAGE: 1/1

Michigan State University
Fiber Loop Transmission QA Device
Electronic parts list

description	quantity	source	part number
LED	32	Digikey	754-1377-ND LED SS 3MM 625NM RED WTR CLR
PHOTOTRANSISTOR	32	Digikey	475-1443-ND PHOTOTRANSISTOR NPN 780NM 3MM
IC1	1	Digikey	PIC18LF1320-I/SO-ND IC MCU FLASH 4KX16 EEPROM 18SOIC
IC2	1	Digikey	NJU7773F33-TE1CT-ND IC LDO VOLT REG 3.3V 150MA SOT23
IC3	1	Digikey	102-1395-1-ND CONVERTER DC/DC 5V OUT 1W
IC4	1	Digikey	MCP6072-E/SN-ND IC OPAMP 1.2MHZ 1.8V 8-SOIC
C1,C2,C3	3	Digikey	478-3886-1-ND CAP TANTALUM 4.7UF 10V 10% SMD
C4	1	Digikey	311-1435-6-ND CAP CERAMIC CC1206JRX7R9BB104
J5	1	Digikey	609-1051-ND CONN MOD JACK 4-4 VERT PCB
SW1	1	Digikey	CKN1723-ND SWITCH PB SPST MOM SEALED PCB
SP1	1	Digikey	445-5229-1-ND BUZZER PIEZO 4KHZ 12.2MM PC MNT
R1,R2,R3,R6	4	Digikey	311-10KERTR-ND SMT RESISTOR RC1206JR-0710KL
R4,R5	2	Digikey	311-1.0KERTR-ND SMT RESISTOR RC1206JR-071KL
R7,R8,R9.R10	4	Digikey	311-100ERTR-ND SMT RESISTOR RC1206JR-07100RL

```
'*****************************************************************
'*  Name    : FLTXXv1d.BAS                                       *
'*  Author  : Barry Tigner, later hacked by Dean Shooltz         *
'*            and then repaired again by Barry Tigner            *
'*  Notice  : Copyright (c) 2011 [select VIEW...EDITOR OPTIONS]  *
'*          : All Rights Reserved                                *
'*  Date    : 12/01/2011                                         *
'*  Version : 1b                                                 *
'*  Notes   : Dean has ported to Proton basic as a test          *
'*          : Edit line# 125 to give the tester its name         *
'*  Note    : Ported back to MELabs PICBasic May 24 2012         *
'*****************************************************************
'* Changes from Barry's code:                                    *
'* (1)  Changed to match arbitrary fiber numbering at U-Minn:    *
'* (1a) Changed loop over rows in SCAN:, now 0 to 7 step +1      *
'* (1b) Changed order of columns to C4,C3,C2,C1                  *
'* (2)  Changed tone routine for Proton Basic compiler (??)      *
'* (3)  Added tone sequence before and after measurement         *
'* (4)  Added 1.5 sec delay after measurement to allow for user  *
'*      to hold trigger button during measurement                *
'* (5)  Changed the settling time from 5 mS to 50 mS to          *
'*      accomodate the larger time constant from larger Rgain    *
'* (6)  Ported back to MicroEngineeringLabs Picbasic             *
'*      This was done due to a cryptic problem with occasional   *
'*      failures to light column #3 of the LEDs.                 *
'*      The problem appears to go away when the program is       *
'*      compiled with the MELabs compiler.                       *
'*      The error may indicate an error in the Proton compiler,  *
'*      or a problem with the configuration bits used with the   *
'*      Proton compiler                                          *
'*****************************************************************

Include "modedefs.bas"

'internal 8 mhz oscillator
OSCCON = $72 'set by Barry Bin = 01110010
DEFINE OSC 8

TRISA=%00100001   'PORTA 6 outputs, 2 inputs
TRISB=%00000000   'PortB 8 outputs

ADCON0 = 1
ADCON1 = %11111110         'set pins as digital
ADCON2 = %10111111
DEFINE ADC_BITS 10         'set the number of bits in result

PA VAR Byte       'Columns in the LED matrix
PB VAR PORTB      'Rows in the LED matrix

FT VAR PORTA.0    'ADC input channel
C1 VAR PA.1       'LED matrix column 1
Tx VAR PORTA.2    'RS232 TX
Rx VAR PORTA.3    'RS232 RX
C2 VAR PA.4       'LED matrix column 2
Sw VAR PORTA.5    'Trigger switch
C4 VAR PA.6       'LED matrix column 4
C3 VAR PA.7       'LED matrix column 3
T1 VAR Word       'Accumulated and averaged ADC measurement
TT VAR Word       'Individual ADC measurement
T2 VAR Word       'Variable used in tone generation
I VAR Byte        'Loop index
J VAR Byte        'Loop index
PT VAR Word[32]   'Table of averaged raw ADC readings
MC VAR Byte       'Index over ADC measurements
CX VAR Byte       'RS232 received character
```

```
'main program starts here

PA=%11010110      'LED Columns HIGH, Tx HIGH
PORTA=PA
T2=60:GoSub TONE  'Tone sequence at initial power-up
T2=40:GoSub TONE

While 1=1

PA=%11010110      'LED Columns HIGH, Tx HIGH
PORTA=PA

CWAIT:            'Wait for button press or RS232 character
CX=0
SerIn2 Rx,84,50,CWAIT2,[CX]
CWAIT2:
If CX = 0 And SW=1 Then
   GoTo CWAIT
EndIf

PA=%11010110          'LED Columns HIGH, Tx HIGH
PORTA=PA

T2=60:GoSub TONE      'Tone sequence that precedes measurement
T2=50:GoSub TONE
T2=40:GoSub TONE

MC=0                  'Clear the measurement index

C4=0:GoSub SCAN:C4=1  'Set column, scan rows, reset column
C3=0:GoSub SCAN:C3=1
C2=0:GoSub SCAN:C2=1
C1=0:GoSub SCAN:C1=1

PA=%11010110          'Ensure LED Columns HIGH, Tx HIGH
PORTA=PA

T2=40:GoSub TONE   'Tone sequence at the end of the measurement
T2=60:GoSub TONE

SerOut2 Tx,84,[13,10,"FLT10 v1d",13,10]
For MC=0 To 31
  SerOut2 Tx,84,[Dec4 PT[MC],13,10]
Next MC
SerOut2 Tx,84,[13,10]
pause 1500       'Delay for held trigger at end of scan
Wend
End

'subroutines start here
TONE:     'Twiddle PORTB.1 and PORTB.2 bits 01, 10, 01, making sound
J=254
For TT=0 To 20000/T2
J=3-J
PB=J
pauseus T2*15
Next TT
pause 100
Return

SCAN:
PORTA = PA  'Write PORTA from memory value PA to set proper LED Column

'Then select proper row:
```

```
PB=1
gosub SCAN2
PB=2
gosub scan2
PB=4
gosub scan2
PB=8
gosub scan2
PB=128
gosub scan2
PB=64
gosub scan2
PB=32
gosub scan2
PB=16
gosub scan2
Return

SCAN2:
  pause 50     '50 mS necessary for settling time at 100K Rgain

  T1=0          'clear the measurement accumulator

  For J=0 To 31
    ADcIn FT ,tt
    T1 = T1 + TT
  Next J

'add 0.5 if > xx.499
  T1 = T1 + T1.4

'shift back to 10 bits
  T1 = T1 >> 5
    PT[MC] = T1
    MC = MC + 1

'Next I
PB=0  'Clear the LED array Rows on PORTB
Return
```