REV	DESCRIPTION	DRAWN	DATE
		APPROVED	DATE

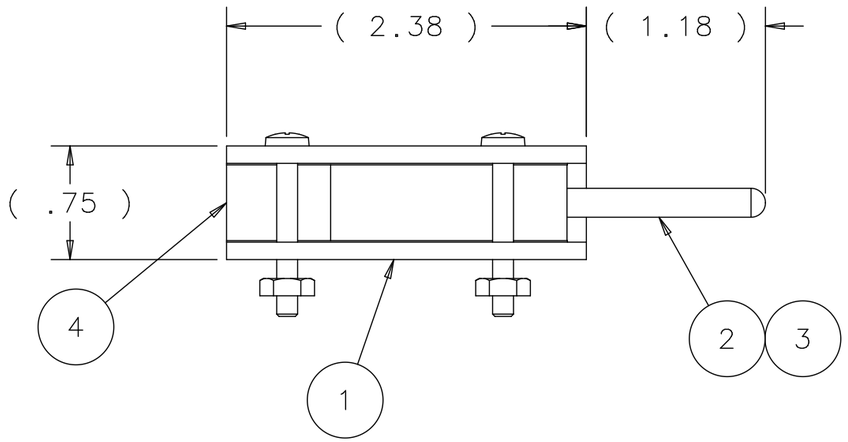

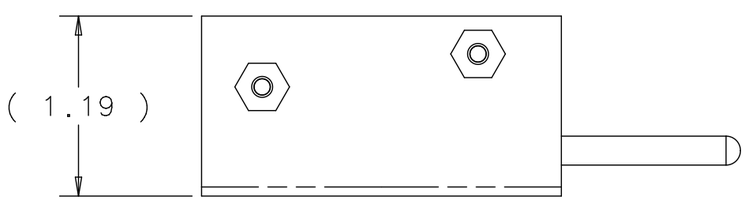

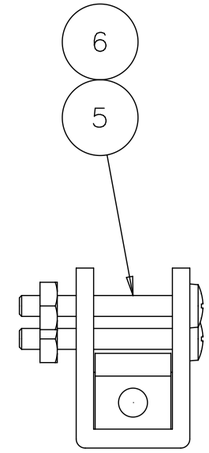

ITEM	PART NO.	DESCRIPTION OR SIZE	QTY.
6	COML	NUT, HX HD, #6-32, NYLON	2
5	COML	SCREW, PHIL BIND HD, #6-32 X 1.00 LG, NYLON	2
4	COML	BLOCK, ACRYLIC, .50 X .50 X .63 LG	1
3	COML	SHIM, G10 2.27 X .38 X .01 THK	2
2	9610	LINEAR MOTION SENSOR,1.06" TRVL.; BEI DUNCAN ELECTRONICS	1
1	MB-489370	SENSOR MTG U-CHANNEL	1

PARTS LIST

UNLESS OTHERWISE SPECIFIED			ORIGINATOR	E.VILLEGAS	10-SEP-2011
.XX	.XXX	ANGLES	DRAWN	D.FRIEND	28-MAR-2012
± .02	± ---	± ---	CHECKED		
			APPROVED		

1. BREAK ALL SHARP EDGES .015 MAX.
2. DO NOT SCALE DRAWING.
3. DIMENSIONS BASED UPON ASME Y14.5M-1994
4. MAX. ALL MACH. SURFACES 250
5. DRAWING UNITS: U.S. INCH

USED ON: ME-489571

MATERIAL: SEE PARTS LIST ABOVE

FERMI NATIONAL ACCELERATOR LABORATORY
UNITED STATES DEPARTMENT OF ENERGY

NOVA - FAR DETECTOR
32 PLANE BLOCK INSTRUMENTATION
LINEAR MOTION SENSOR SUB-ASSY

SCALE	DRAWING NUMBER	SHEET	REV
1:1	3929.330-MB-489633	1 OF 1	

CREATED WITH : Ideas12NXSeries | GROUP: PPD/MECHANICAL DEPARTMENT

Created: 14:41:57 on 28-03-12 (D-M-Y) By: friend State: 1-INITIAL