REV	DESCRIPTION	DRAWN	DATE
		APPROVED	DATE

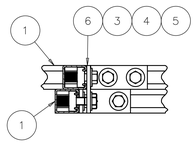

DETAIL B
8 PLCS
SCALE: 1:4

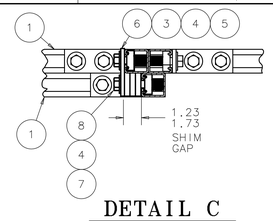

DETAIL C
8 PLCS
SCALE: 1:4

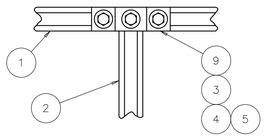

DETAIL D
4 PLCS
SCALE: 1:4

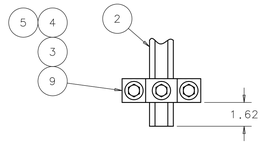

DETAIL E
8 PLCS
SCALE: 1:4

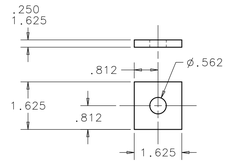

DETAIL H
SHIM BLOCK, ITEM #7
SCALE: 1:2

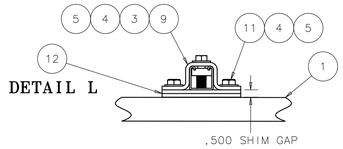

DETAIL J
8 PLCS
SCALE: 1:4

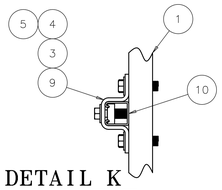

DETAIL K
8 PLCS
SCALE: 1:4

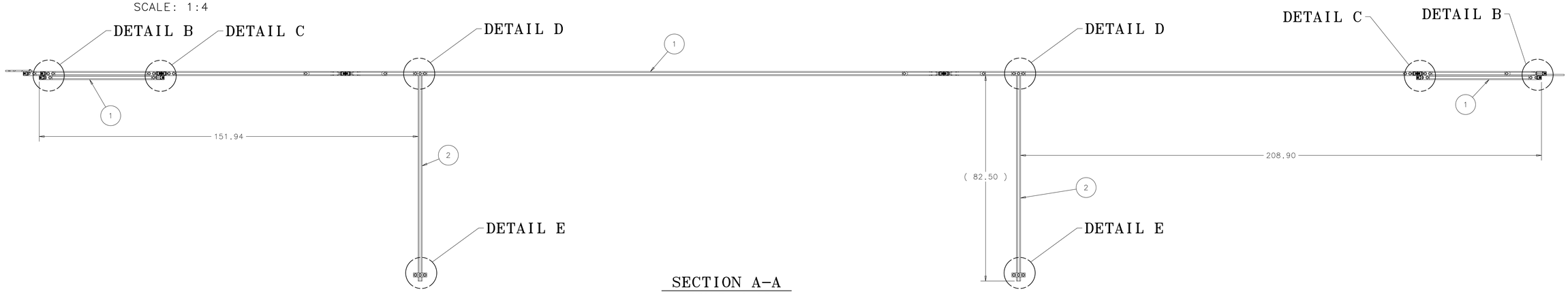

SECTION A-A
SCALE: 1:16

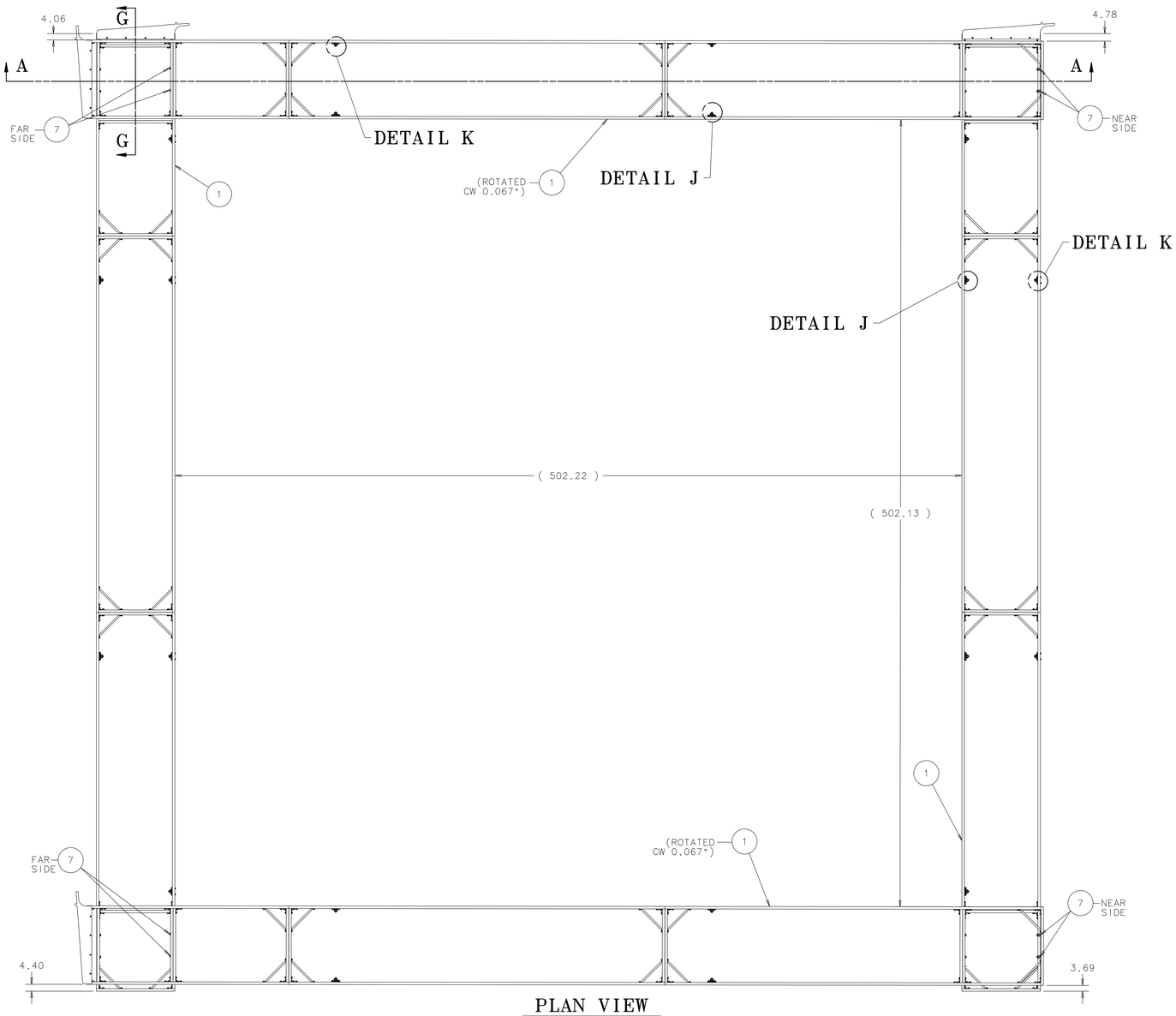

PLAN VIEW
SCALE: 1:32

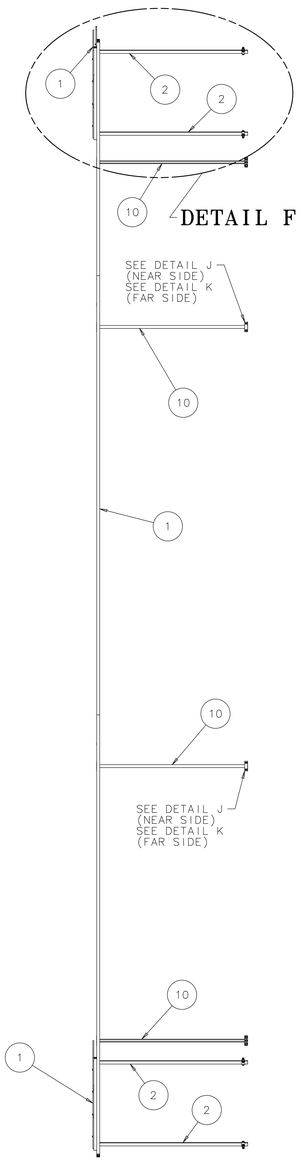

ELEVATION
SCALE: 1:32

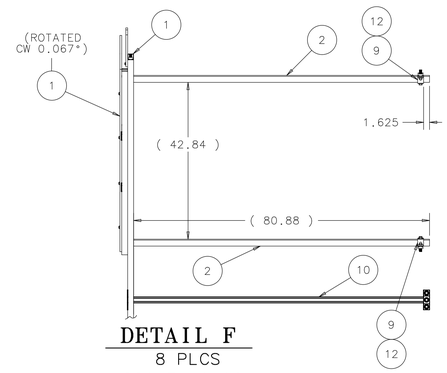

DETAIL F
8 PLCS
SCALE: 1:16

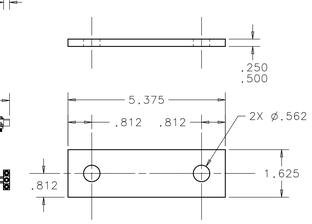

DETAIL L
SHIM BLOCK - #2, ITEM #12
SCALE: 1:2

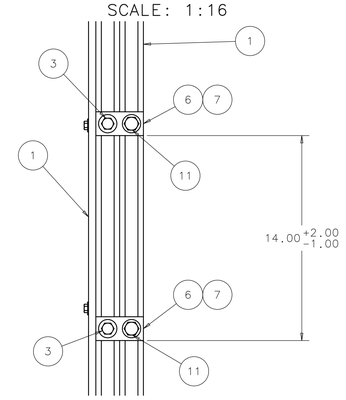

DETAIL G
TYP PLANE TO PLANE
CONNECTION SPACING
8 PLCS
SCALE: 1:4

NOTES:

1. ESTIMATED WEIGHT 1638 LBS.

ITEM	PART NO.	DESCRIPTION OR SIZE	QTY.
12	COML	SHIM BLOCK - #2 SEE DETAIL L	A/R
11	COML	SCREW, HEX HD CAP, GRADE 5 STL 1/2"-13 UNC-2A X 1.50 LG.	40
10	COML	UNISTRUT CHANNEL, P1000, GREEN 82.500 LG.	12
9	COML	UNISTRUT "U" SHAPE FITTING P-1047, GREEN	232
8	COML	SCREW, HEX HD CAP, GRADE 5 STL 1/2"-13 UNC-2A X 3.00 LG.	8
7	COML	SHIM BLOCK SEE DETAIL F	A/R
6	COML	UNISTRUT FLAT PLATE FITTING P-1924, GREEN	16
5	COML	UNISTRUT SPRING NUT, P-1010 1/2"-13 UNC	152
4	COML	WASHER, FLAT, FOR 1/2" SCREW STEEL	152
3	COML	SCREW, HEX HD CAP, GRADE 5 STL 1/2"-13 UNC-2A X 1.25 LG.	104
2	COML	UNISTRUT CHANNEL, P1000, GREEN 84.125 LG.	8
1	ME-489653	MOCKUP MODULE ASSEMBLY	4

PARTS LIST

UNLESS OTHERWISE SPECIFIED			ORIGINATOR	P.LUKENS	04-MAY-2012
.XX	.XXX	ANGLES	DRAWN	D.FRIEND	04-MAY-2012
± .12	± .06	± 1	CHECKED	J.RAUCH	09-MAY-2012
			APPROVED	P.LUKENS	11-MAY-2012

1. BREAK ALL SHARP EDGES .015 MAX.
2. DO NOT SCALE DRAWING.
3. DIMENSIONS BASED UPON ASME Y14.5M-1994
4. MAX. ALL MACH. SURFACES 250
5. DRAWING UNITS: U.S. INCH

USED ON: ME-489678

MATERIAL: SEE PARTS LIST ABOVE

FERMI NATIONAL ACCELERATOR LABORATORY
UNITED STATES DEPARTMENT OF ENERGY

NOVA-INSTALLATION_&_ENG_SPECS
MOCK UP BLOCK ASSEMBLY
MOCKUP 2 PLANE STAGGERED ASSY

SCALE	DRAWING NUMBER	SHEET	REV
AS NOTED	3929.330-ME-489657	1 OF 1	

CREATED WITH : Ideas12NXSeries GROUP: PPD/MECHANICAL DEPARTMENT

NOTICE: IMAGE OBTAINED FROM FERMILAB WEB SITE
This information is provided for REFERENCE use only. Not for MANUFACTURE, or DESIGN INFORMATION. All information contained in this document represents work sponsored by an agency of the U.S. Government. Neither the U.S. Government nor any agency thereof, nor Universities Research Association, Inc., nor any of their employees or officers, makes any warranty, express or implied, or assumes any legal liability or responsibility for the accuracy, completeness, or usefulness of any information, apparatus, product or process disclosed, or represents that its use would not infringe privately owned rights.