REV	DESCRIPTION	DRAWN	DATE
		APPROVED	DATE

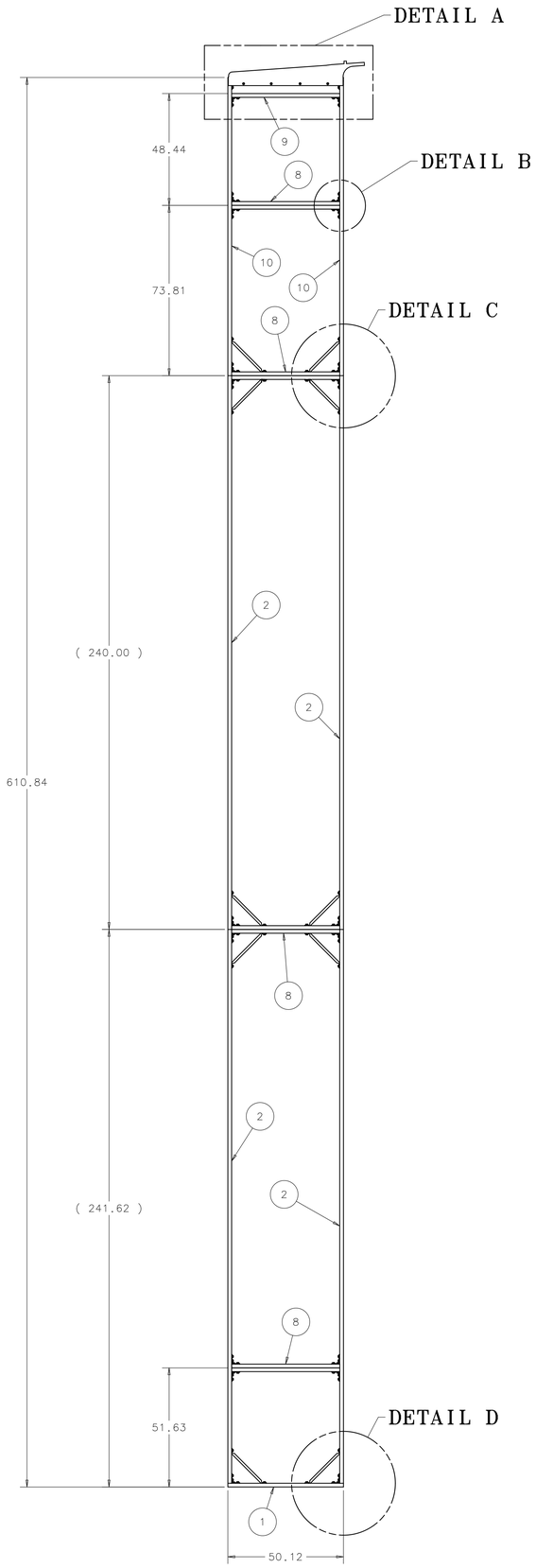

PLAN VIEW
SCALE: 1/2" = 1'-0"

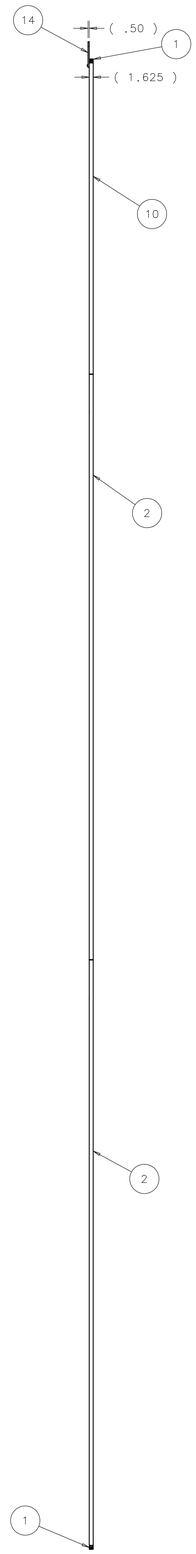

ELEVATION
SCALE: 1/2" = 1'-0"

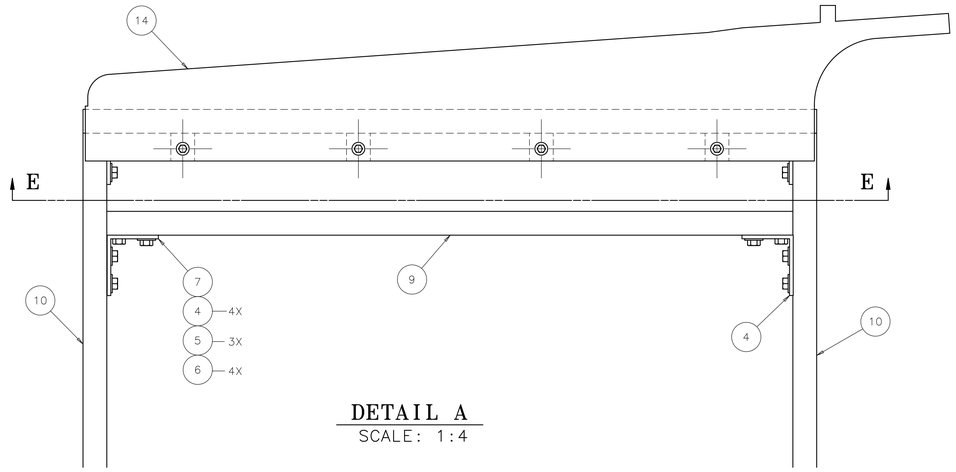

DETAIL A
SCALE: 1:4

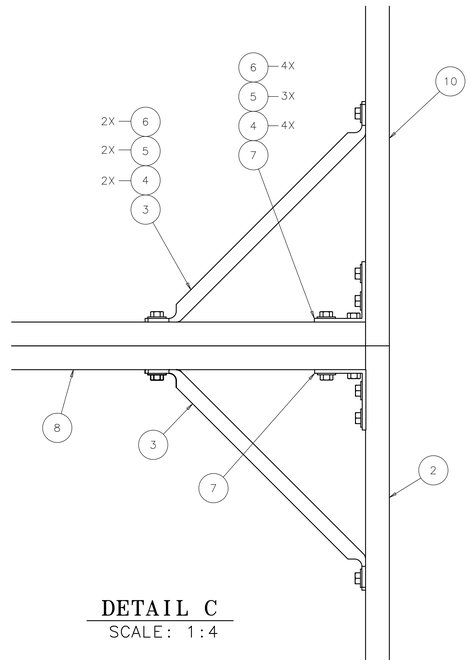

DETAIL C
SCALE: 1:4

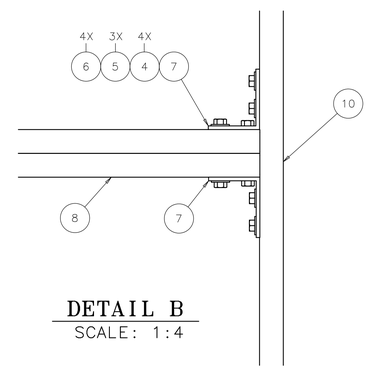

DETAIL B
SCALE: 1:4

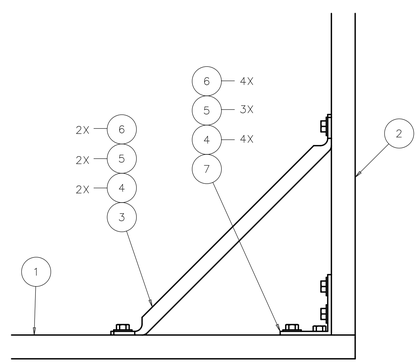

DETAIL D
SCALE: 1:4

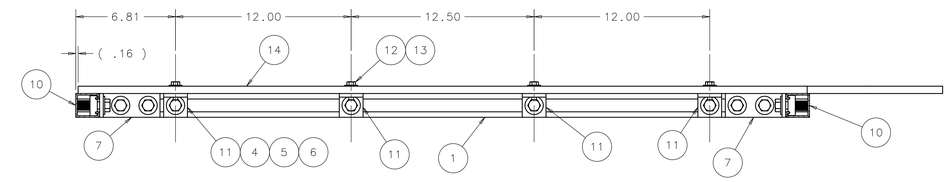

SECTION E-E
SCALE: 1:4

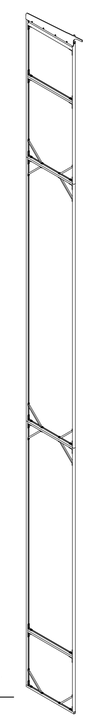

ISOMETRIC VIEW
SCALE: NONE

NOTES:

1. ESTIMATED WEIGHT 318 LBS.

ITEM	PART NO.	DESCRIPTION OR SIZE	QTY.
14	ME-489649	MOCK-UP MANIFOLD FOAM INSULATION BOARD	1
13	COML	WASHER, FLAT, FOR 5/16" SCREW STEEL	4
12	COML	SCREW, HEX HD CAP, GRADE 5 STL 5/16"-18 UNC-2A X 1.00 LG.	4
11	COML	UNISTRUT 90° ANGLE FITTING, GREEN P-1723	4
10	COML	UNISTRUT CHANNEL, P1000, GREEN 127.592 LG	2
9	COML	UNISTRUT CHANNEL, P1000, GREEN 46.875 LG	1
8	COML	UNISTRUT CHANNEL, P1001, GREEN 46.875 LG	4
7	COML	UNISTRUT 90° ANGLE FITTING, GREEN P-1325	22
6	COML	UNISTRUT SPRING NUT, P-1010 1/2"-13 UNC	112
5	COML	WASHER, FLAT, FOR 1/2" SCREW STEEL	90
4	COML	SCREW, HEX HD CAP, GRADE 5 STL 1/2"-13 UNC-2A X 1.25 LG.	112
3	COML	UNISTRUT KNEE BRACE P2458-1, GREEN 18.00 LG.	2
2	COML	UNISTRUT CHANNEL, P1000, GREEN 240.000 LG	4
1	COML	UNISTRUT CHANNEL, P1000, GREEN 50.125 LG	2

PARTS LIST

UNLESS OTHERWISE SPECIFIED			ORIGINATOR	P.LUKENS	16-APR-2012
.XX	.XXX	ANGLES	DRAWN	D.FRIEND	16-APR-2012
± .12	± .06	± 1°	CHECKED		
			APPROVED		

1. BREAK ALL SHARP EDGES .015 MAX.
2. DO NOT SCALE DRAWING.
3. DIMENSIONS BASED UPON ASME Y14.5M-1994
4. MAX. ALL MACH. SURFACES 125
5. DRAWING UNITS: U.S.INCH

USED ON: ME-489655 & ME-489657

MATERIAL: SEE PARTS LIST ABOVE

FERMI NATIONAL ACCELERATOR LABORATORY
UNITED STATES DEPARTMENT OF ENERGY

NOVA-INSTALLATION_&_ENG_SPECS
MOCK UP BLOCK ASSEMBLY
MOCKUP MODULE ASSEMBLY

SCALE	DRAWING NUMBER	SHEET	REV
AS NOTED	3929.330-ME-489653	1 OF 1	

CREATED WITH : Ideas12NXSeries GROUP: PPD/MECHANICAL DEPARTMENT

Created: 10:24:25 on 09-05-12 (D-M-Y) By: friend State: 1-INITIAL