REV	DESCRIPTION	DRAWN	DATE
		APPROVED	DATE

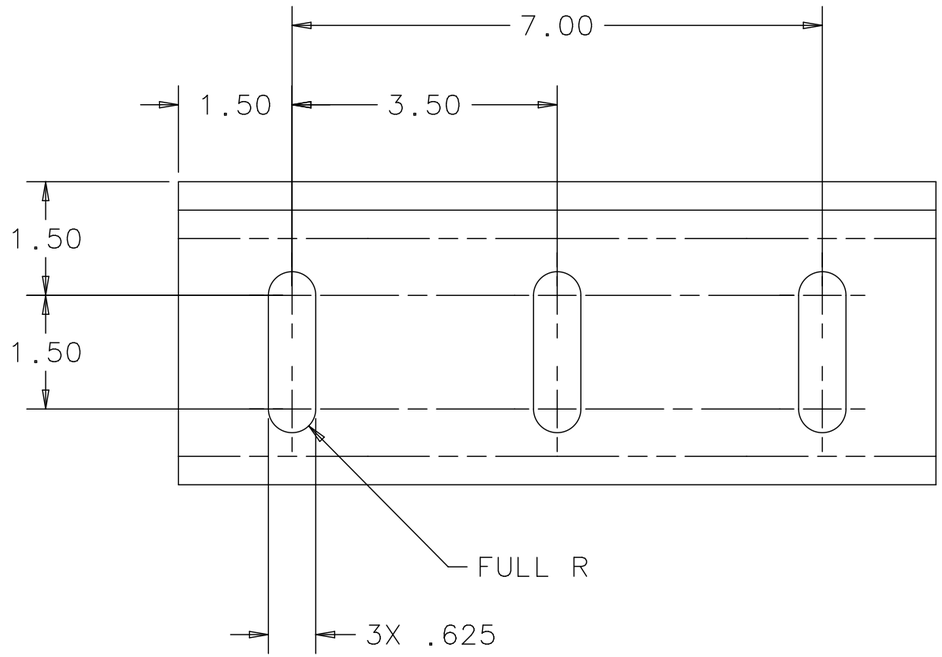

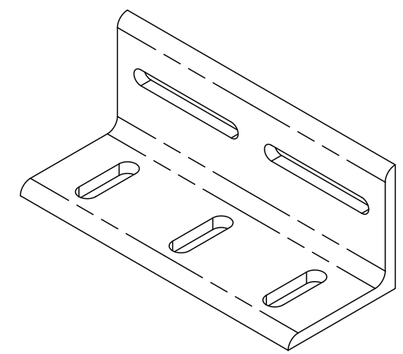

ISOMETRIC VIEW
SCALE - 1:4

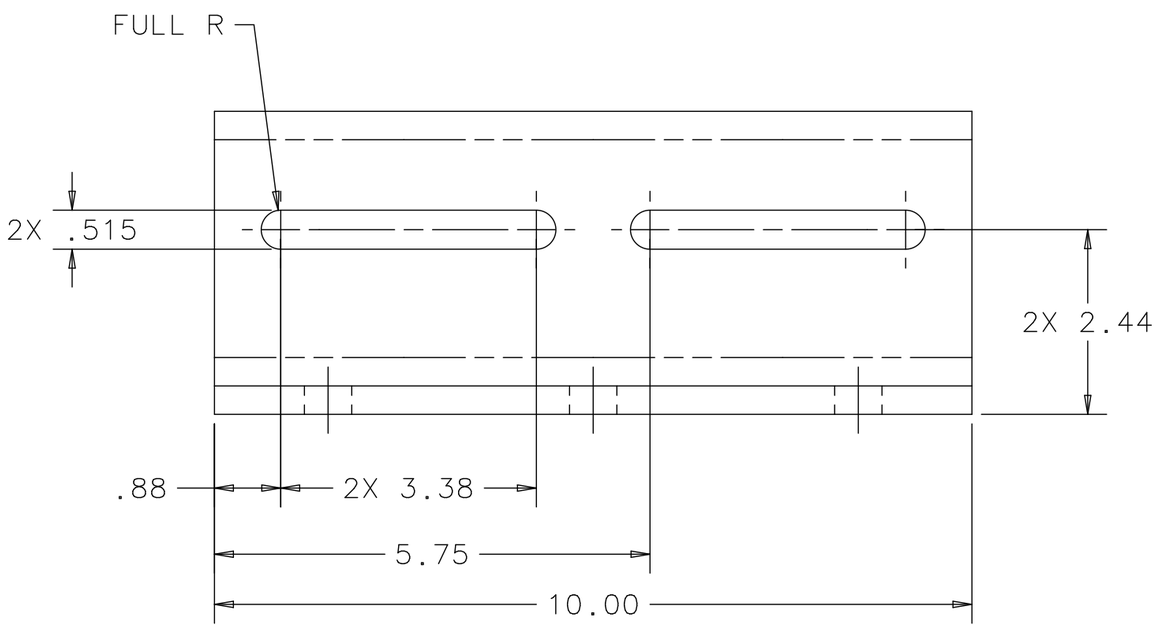

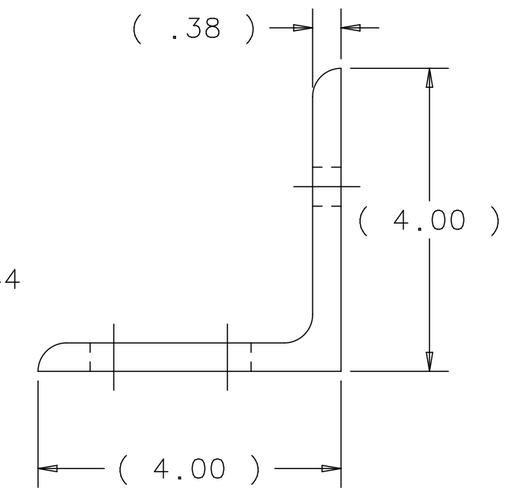

NOTE:
1. PAINT WITH PRIMER, DAMP PROOF RUST-OLEUM NO 769 OR EQUIVALENT.

UNLESS OTHERWISE SPECIFIED			ORIGINATOR	R.J.WOODS	21-FEB-2012
.XX	.XXX	ANGLES	DRAWN	J.RAUCH	21-FEB-2012
± .06	± .015	±	CHECKED	J.RAUCH	29-FEB-2012
1. BREAK ALL SHARP EDGES .03 MAX. 2. DO NOT SCALE DRAWING. 3. DIMENSIONS BASED UPON ASME Y14.5M-1994 4. MAX. ALL MACH. SURFACES 250 5. DRAWING UNITS: U.S. INCH			APPROVED	R.WOODS	01-MAR-2012
			USED ON	ME-489547	
			MATERIAL	ASTM-A36 STEEL ANGLE, 4X4X3/8	

FERMI NATIONAL ACCELERATOR LABORATORY
UNITED STATES DEPARTMENT OF ENERGY

NOVA-EQUIPMENT HANDLING
ASH RIVER PIVOTER
SUPPORT ANGLE-3 SLOTS

SCALE	DRAWING NUMBER	SHEET	REV
1:2 AS NOTED	3929.220-MB-489554	1 OF 1	

CREATED WITH : Ideas12NXSeries | GROUP: PPD/MECHANICAL DEPARTMENT

Created: 14:07:56 on 01-03-12 (D-M-Y) By: jerauch State: 3-RELEASED