REV	DESCRIPTION	DRAWN	DATE
		APPROVED	DATE

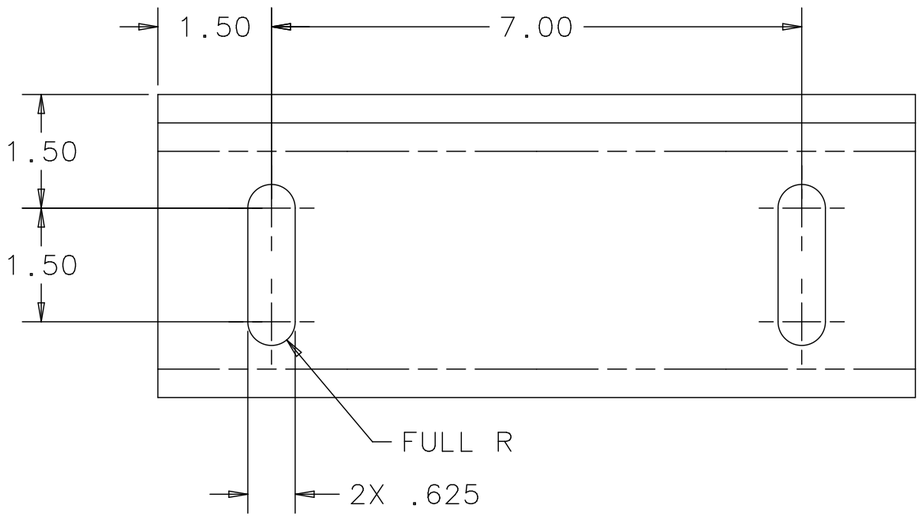

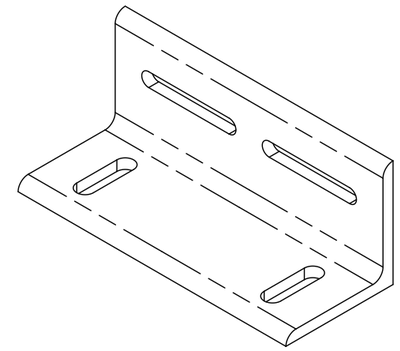

ISOMETRIC VIEW
SCALE - 1:4

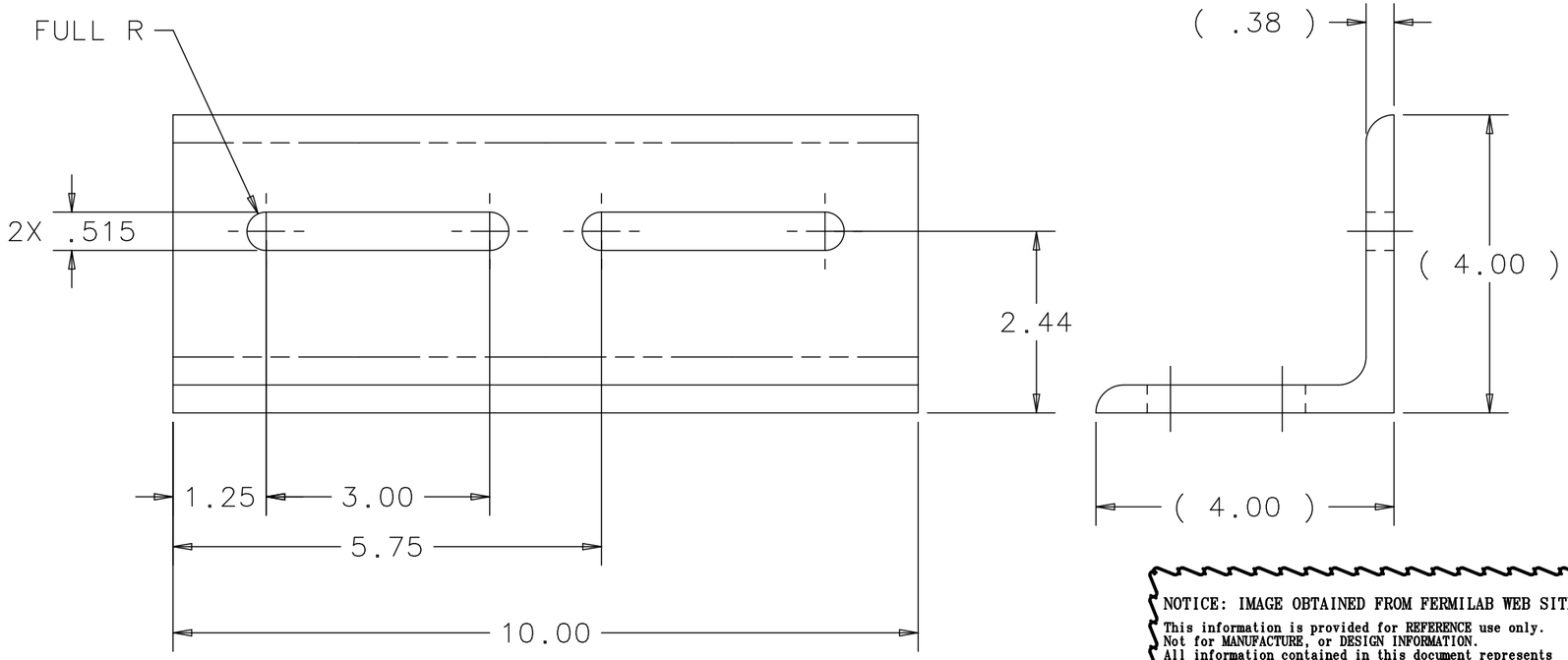

NOTE:
1. PAINT WITH PRIMER, DAMP PROOF RUST-OLEUM NO 769 OR EQUIVALENT

NOTICE: IMAGE OBTAINED FROM FERMILAB WEB SITE
This information is provided for REFERENCE use only. Not for MANUFACTURE, or DESIGN INFORMATION. All information contained in this document represents work sponsored by an agency of the U.S. Government. Neither the U.S. Government nor any agency thereof, nor Universities Research Association, Inc., nor any of their employees or officers, makes any warranty, express or implied, or assumes any legal liability or responsibility for the accuracy, completeness, or usefulness of any information, apparatus, product or process disclosed, or represents that its use would not infringe privately owned rights.

UNLESS OTHERWISE SPECIFIED			ORIGINATOR	R.J.WOODS	21-FEB-2012
.XX	.XXX	ANGLES	DRAWN	J.RAUCH	21-FEB-2012
± .06	± .015	± 1°	CHECKED	J.RAUCH	29-FEB-2012
			APPROVED	R.WOODS	01-MAR-2012

1. BREAK ALL SHARP EDGES .03 MAX.
2. DO NOT SCALE DRAWING.
3. DIMENSIONS BASED UPON ASME Y14.5M-1994
4. MAX. ALL MACH. SURFACES 250
5. DRAWING UNITS: U.S.INCH

USED ON: ME-489547

MATERIAL: ASTM-A36 STEEL ANGLE, 4X4X3/8

FERMI NATIONAL ACCELERATOR LABORATORY
UNITED STATES DEPARTMENT OF ENERGY

NOVA-EQUIPMENT HANDLING ASH RIVER PIVOTER SUPPORT ANGLE

SCALE	DRAWING NUMBER	SHEET	REV
1:2 AS NOTED	3929.220-MB-489553	1 OF 1	

CREATED WITH : Ideas12NXSeries | GROUP: PPD/MECHANICAL DEPARTMENT