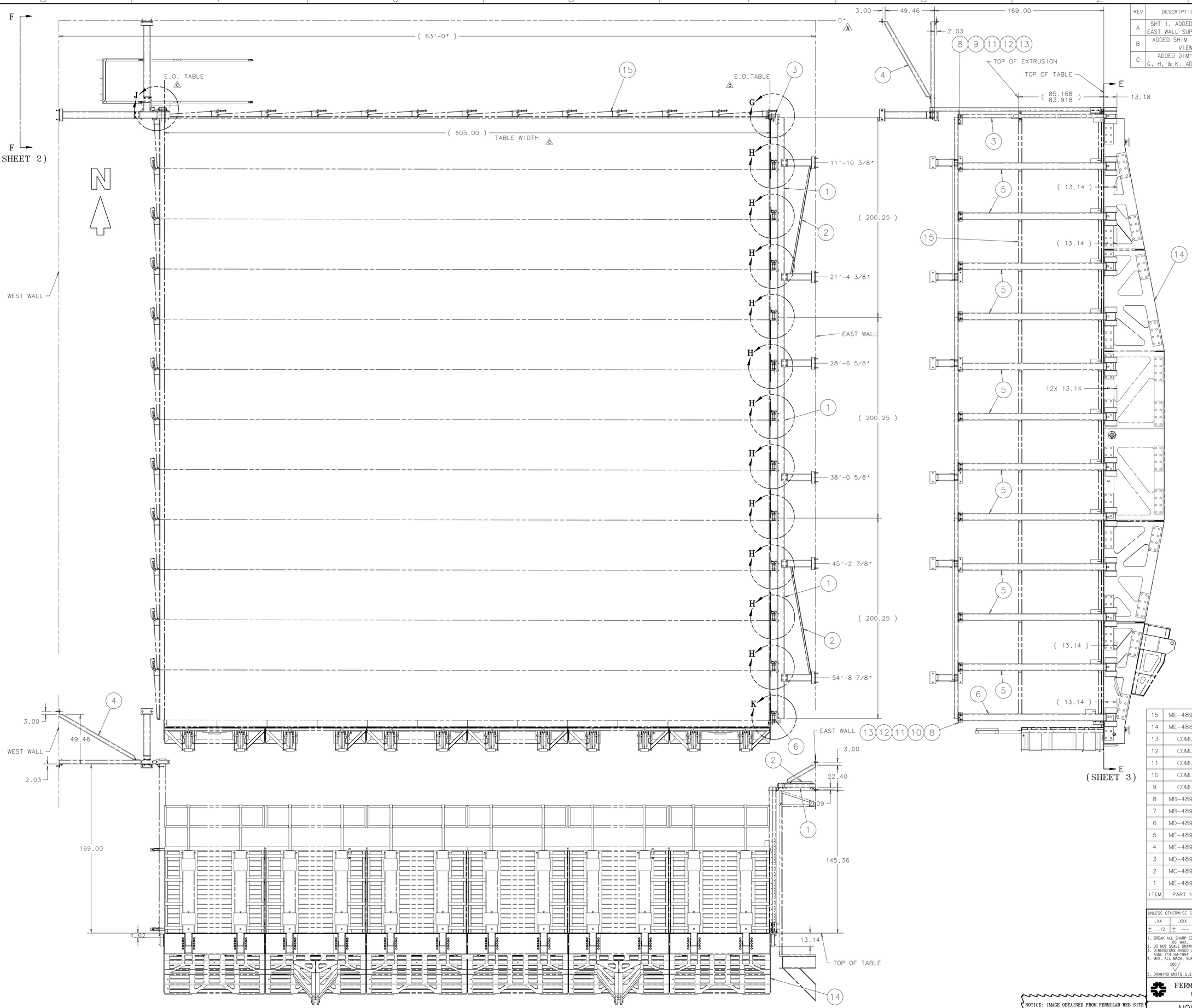

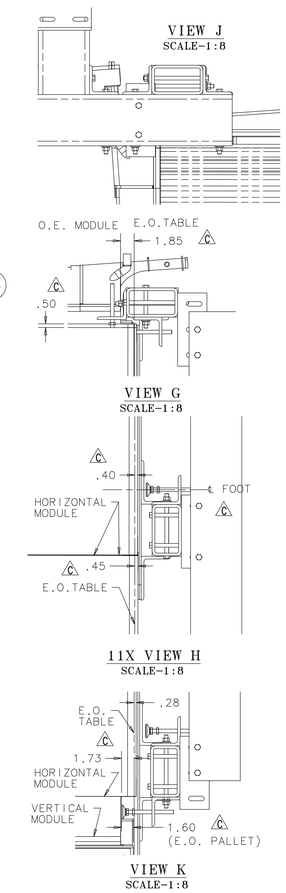

REV	DESCRIPTION	DRAWN / APPROVED	DATE / DATE
A	SHT 1, ADDED DIMENSIONS TO EAST WALL SUPPORTS OF ITEM 1	J.RAUCH / R.WOODS	14-MAR-2012 / 15-MAR-2012
B	ADDED SHIM INFORMATION TO VIEW C & D	J.RAUCH / R.J.WOODS	16-APR-2012 / 16-APE-2012
C	ADDED DIM'S TO DETAILS G, H, & K. ADDED TABLE WIDTH	D.FRIEND / J.RAUCH	16-MAY-2012 / 16-MAY-2012

ITEM	PART NO.	DESCRIPTION OR SIZE	QTY.
15	ME-489028	32 PLANE BLOCK ASSY - STAGGERED	1
14	ME-486924	AR ASSY TABLE	1
13	COML.	LOCKWASHER, STD., 1/2" NOMINAL ZINC PLATED CARBON STEEL	54
12	COML.	FLAT WASHER, STD., 1/2" NOMINAL ZINC PLATED CARBON STEEL	54
11	COML.	HEX. HD. NUT, STD. 1/2-13 UNC ZINC PLATED CARBON STEEL GR. 5	54
10	COML.	HEX HD. BOLT, 1/2-13 UNC X 5.50 LG. ZINC PLATED CARBON STEEL GR. 5	53
9	COML.	HEX HD. BOLT, 1/2-13 UNC X 8.50 LG. ZINC PLATED CARBON STEEL GR. 5	1
8	MB-489554	SUPPORT ANGLE-3 SLOT	2
7	MB-489553	SUPPORT ANGLE	11
6	MD-489548	POST SE VERTICAL STOP ASSEMBLY	1
5	ME-489567	POST EAST HORZ STOP ASSEMBLY	11
4	ME-489531	CORNER POST-NW ASSEMBLY	1
3	MD-489534	CORNER POST-NE ASSEMBLY	1
2	MC-489542	ANGLE 2X2X3/8X120LG	2
1	ME-489524	BRACE EAST WALL SYSTEM ASSEMBLY	3

PARTS LIST

UNLESS OTHERWISE SPECIFIED			ORIGINATOR	R.J.WOODS	20-FEB-2012
.XX	.XXX	ANGLES	DRAWN	J.RAUCH	20-FEB-2012
± .12	± ---	± ---	CHECKED	J.RAUCH	07-MAR-2012
1. BREAK ALL SHARP EDGES .06 MAX. 2. DO NOT SCALE DRAWING. 3. DIMENSIONS BASED UPON ASME Y14.5M-1994 4. MAX. ALL MACH. SURFACES 500 5. DRAWING UNITS: U.S. INCH			APPROVED	R.WOODS	07-MAR-2012
			USED ON	ME-489104	
			MATERIAL	SEE PARTS LIST ABOVE	

FERMI NATIONAL ACCELERATOR LABORATORY
UNITED STATES DEPARTMENT OF ENERGY

NOVA-EQUIPMENT HANDLING BLOCK PIVOTER AR STORY POLES TO TABLE

SCALE	DRAWING NUMBER	SHEET	REV
1:32 OR NOTED	3929.200-ME-489547	1 OF 3	C

CREATED WITH : Ideas12NXSeries GROUP: PPD/MECHANICAL DEPARTMENT

NOTICE: IMAGE OBTAINED FROM FERMILAB WEB SITE
This information is provided for REFERENCE use only. Not for MANUFACTURE, or DESIGN INFORMATION. All information contained in this document represents work sponsored by an agency of the U.S. Government. Neither the U.S. Government nor any agency thereof, nor Universities Research Association, Inc., nor any of their employees or officers, makes any warranty, express or implied, or assumes any legal liability or responsibility for the accuracy, completeness, or usefulness of any information, apparatus, product or process disclosed, or represents that its use would not infringe privately owned rights.

REV	DESCRIPTION	DRAWN / APPROVED	DATE / DATE
A	SHT 1, ADDED DIMENSIONS TO EAST WALL SUPPORTS OF ITEM 1	J.RAUCH	14-MAR-2012
		R.WOODS	15-MAR-2012
B	ADDED SHIM INFORMATION TO VIEW C & D	J.RAUCH	16-APR-2012
		R.J.WOODS	16-APE-2012
C	ADDED DIM'S TO DETAILS G, H, & K. ADDED TABLE WIDTH	D.FRIEND	16-MAY-2012
		J.RAUCH	16-MAY-2012

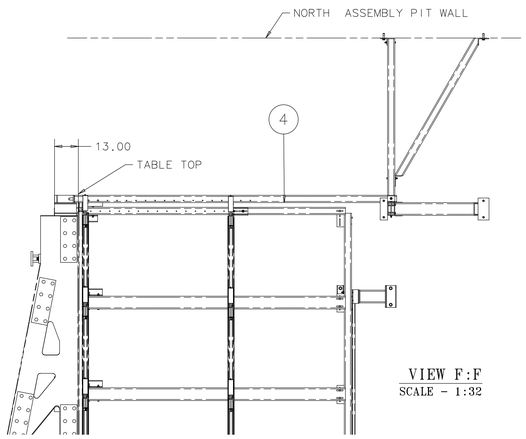

VIEW F:F
SCALE - 1:32

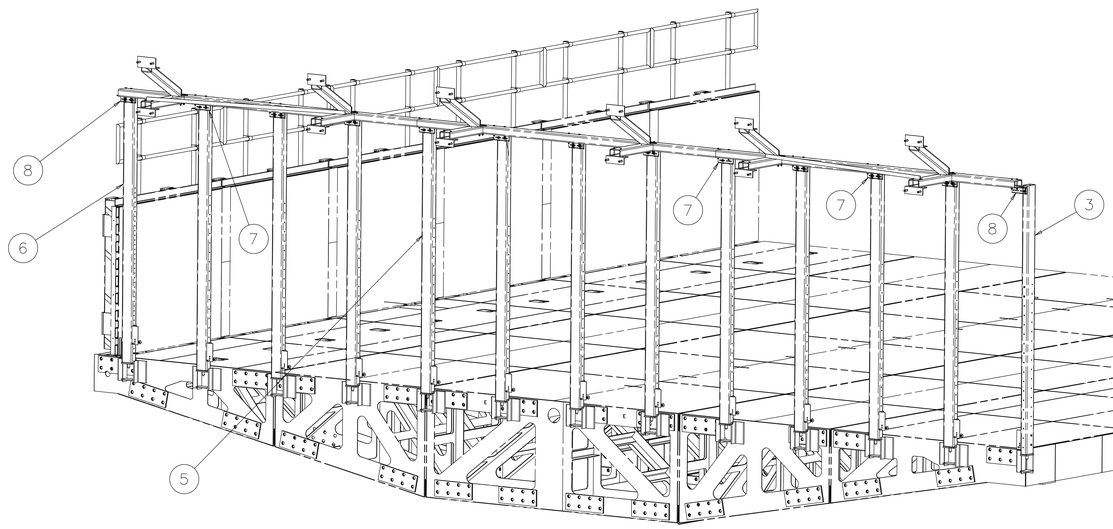

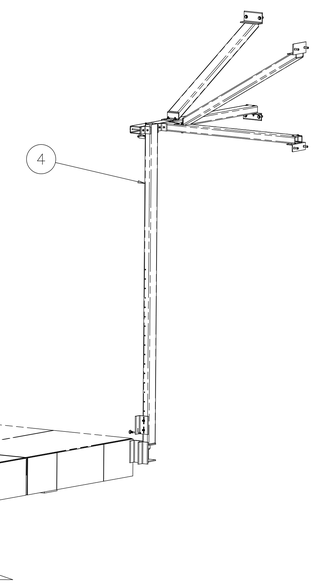

UNLESS OTHERWISE SPECIFIED			ORIGINATOR	R.J.WOODS	20-FEB-2012
.XX	.XXX	ANGLES	DRAWN	J.RAUCH	20-FEB-2012
± .12	± ---	± ---	CHECKED	J.RAUCH	07-MAR-2012
1. BREAK ALL SHARP EDGES .06 MAX.			APPROVED	R.WOODS	07-MAR-2012
2. DO NOT SCALE DRAWING. 3. DIMENSIONS BASED UPON ASME Y14.5M-1994 4. MAX. ALL MACH. SURFACES 500			USED ON	ME-489104	
5. DRAWING UNITS: U.S.INCH			MATERIAL	SEE PARTS LIST ABOVE	

FERMI NATIONAL ACCELERATOR LABORATORY
UNITED STATES DEPARTMENT OF ENERGY

NOTICE: IMAGE OBTAINED FROM FERMILAB WEB SITE
This information is provided for REFERENCE use only. Not for MANUFACTURE, or DESIGN INFORMATION. All information contained in this document represents work sponsored by an agency of the U.S. Government. Neither the U.S. Government nor any agency thereof, nor Universities Research Association, Inc., nor any of their employees or officers, makes any warranty, express or implied, or assumes any legal liability or responsibility for the accuracy, completeness, or usefulness of any information, apparatus, product or process disclosed, or represents that its use would not infringe privately owned rights.

NOVA-EQUIPMENT HANDLING BLOCK PIVOTER AR STORY POLES TO TABLE

SCALE	DRAWING NUMBER	SHEET	REV
1:32 OR NOTED	3929.200-ME-489547	2 OF 3	C

CREATED WITH : Ideas12NXSeries GROUP: PPD/MECHANICAL DEPARTMENT

REV	DESCRIPTION	DRAWN / APPROVED	DATE / DATE
A	SHT 1, ADDED DIMENSIONS TO EAST WALL SUPPORTS OF ITEM 1	J.RAUCH	14-MAR-2012
		R.WOODS	15-MAR-2012
B	ADDED SHIM INFORMATION TO VIEW C & D	J.RAUCH	16-APR-2012
		R.J.WOODS	16-APE-2012
C	ADDED DIM'S TO DETAILS G, H, & K. ADDED TABLE WIDTH	D.FRIEND	16-MAY-2012
		J.RAUCH	16-MAY-2012

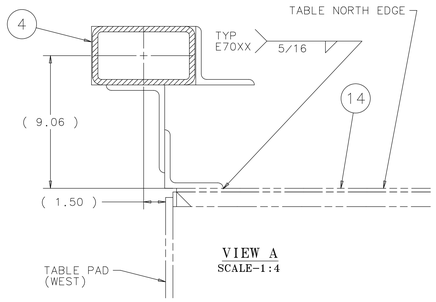

VIEW A
SCALE-1:4

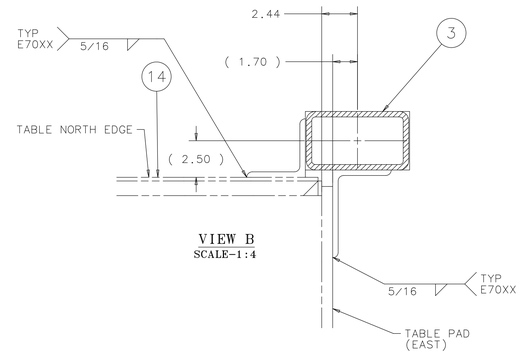

VIEW B
SCALE-1:4

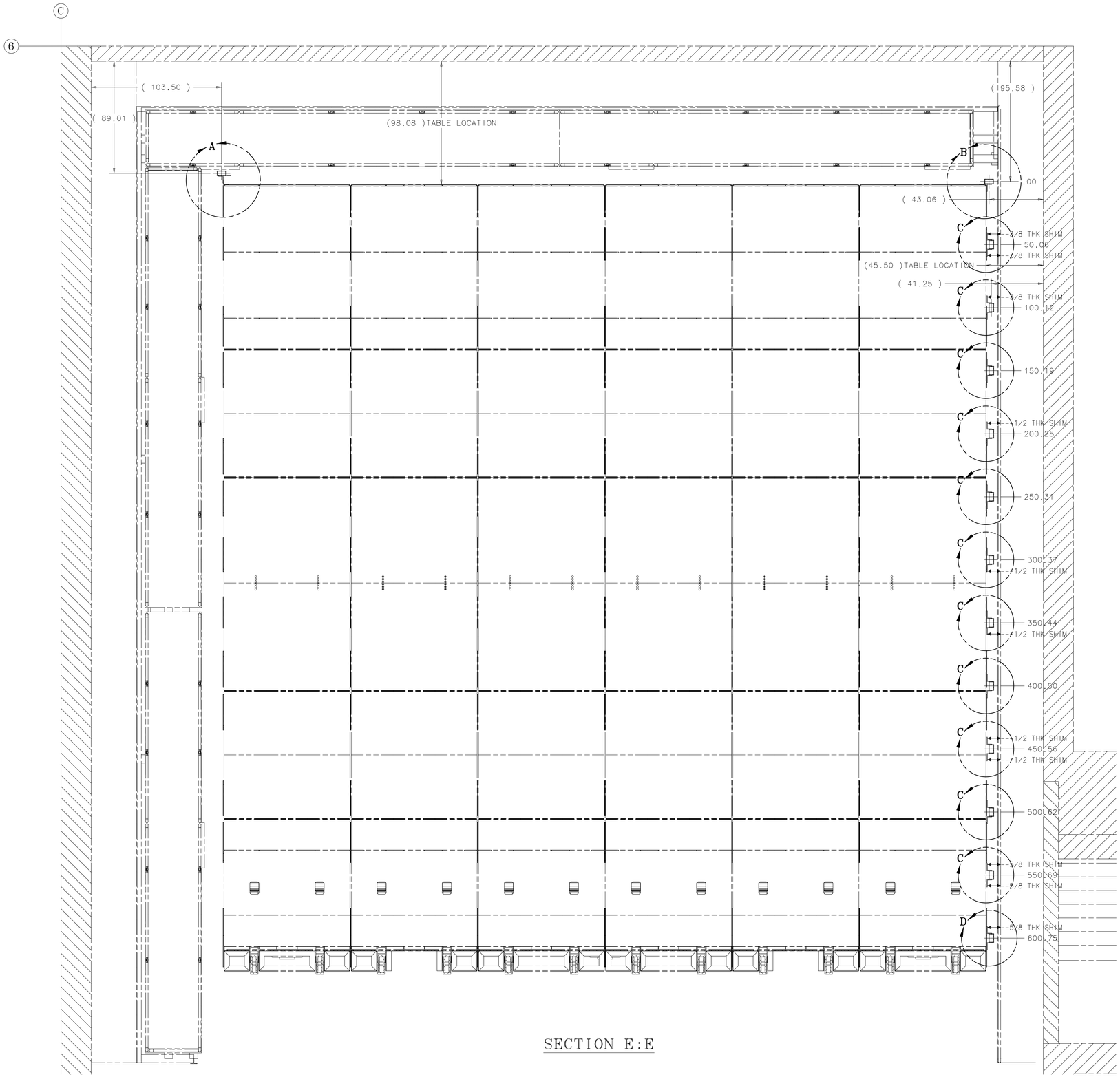

SECTION E:E

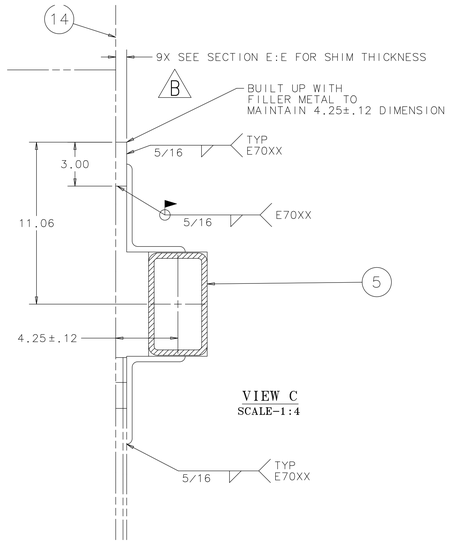

VIEW C
SCALE-1:4

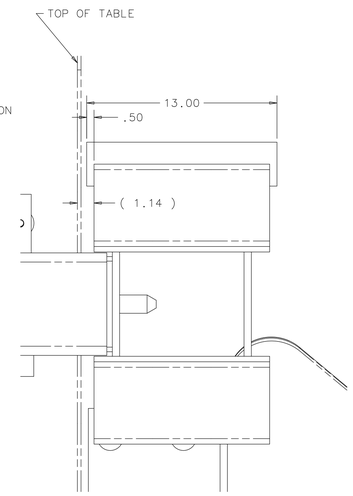

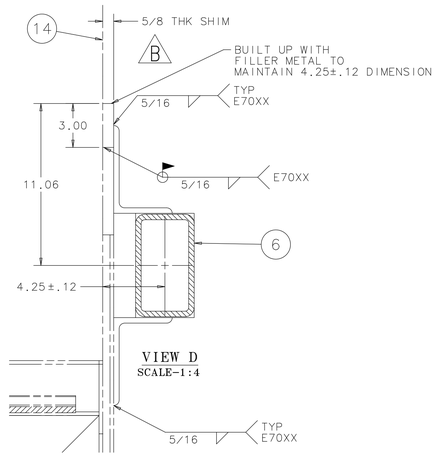

VIEW D
SCALE-1:4

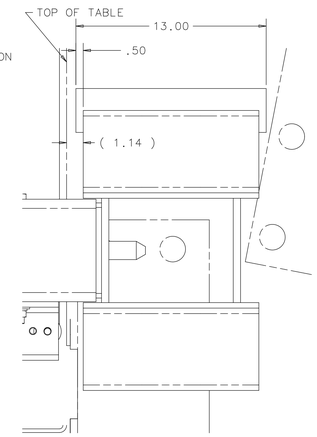

UNLESS OTHERWISE SPECIFIED			ORIGINATOR	R.J.WOODS	20-FEB-2012
.XX	.XXX	ANGLES	DRAWN	J.RAUCH	20-FEB-2012
± .12	± ---	± ---	CHECKED	J.RAUCH	07-MAR-2012
1. BREAK ALL SHARP EDGES .06 MAX 2. DO NOT SCALE DRAWING. 3. DIMENSIONS BASED UPON ASME Y14.5M-1994 4. MAX. ALL MACH. SURFACES 500/ 5. DRAWING UNITS: U.S. INCH			APPROVED	R.WOODS	07-MAR-2012
			USED ON	ME-489104	
			MATERIAL	SEE PARTS LIST ABOVE	

FERMI NATIONAL ACCELERATOR LABORATORY
UNITED STATES DEPARTMENT OF ENERGY

NOTICE: IMAGE OBTAINED FROM FERMILAB WEB SITE
This information is provided for REFERENCE use only.
Not for MANUFACTURE, or DESIGN INFORMATION.
All information contained in this document represents work sponsored by an agency of the U.S. Government.
Neither the U.S. Government nor any agency thereof, nor Universities Research Association, Inc., nor any of their employees or officers, makes any warranty, express or implied, or assumes any legal liability or responsibility for the accuracy, completeness, or usefulness of any information, apparatus, product or process disclosed, or represents that its use would not infringe privately owned rights.

NOVA-EQUIPMENT HANDLING BLOCK PIVOTER AR STORY POLES TO TABLE

SCALE	DRAWING NUMBER	SHEET	REV
1:32 OR NOTED	3929.200-ME-489547	3 OF 3	C

CREATED WITH : Ideas12NXSeries GROUP: PPD/MECHANICAL DEPARTMENT