REV	DESCRIPTION	DRAWN	DATE
		APPROVED	DATE
A	ADDED ITEMS #10 & 11 WEIGHT WAS 431 LBS	D.FRIEND	19-JUN-2012
		J.RAUCH	19-JUN-2012

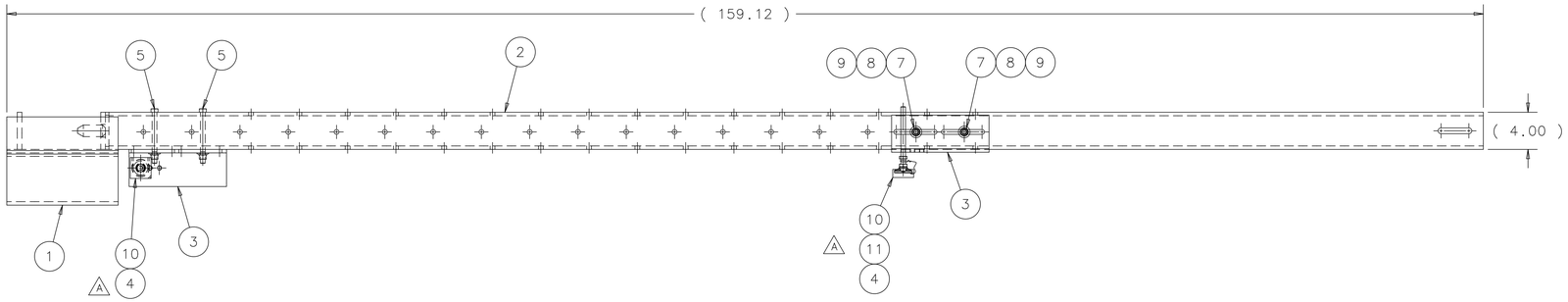

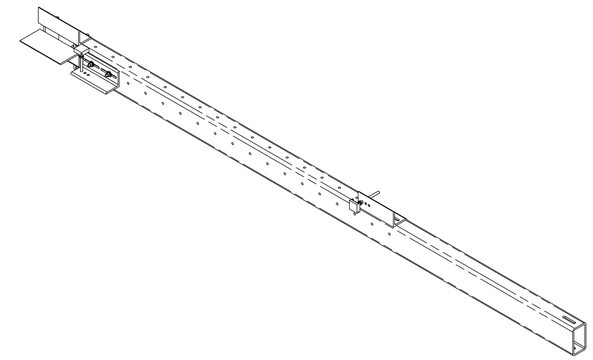

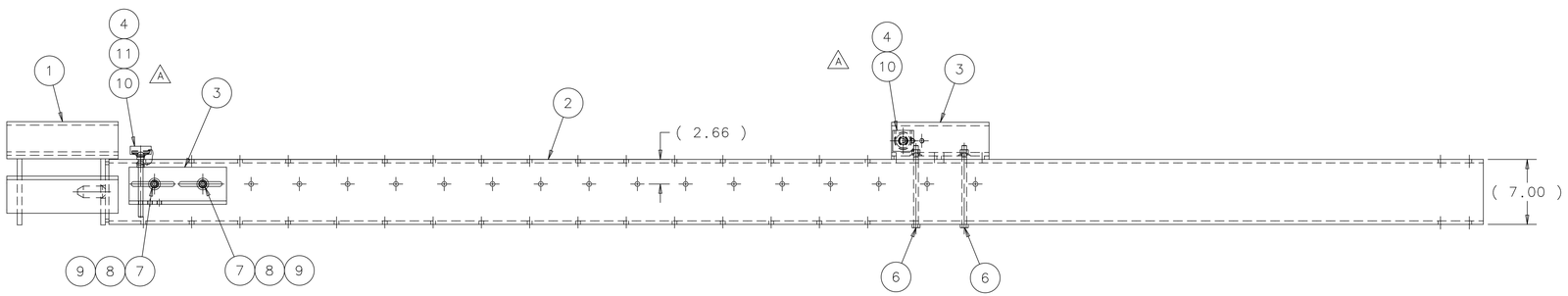

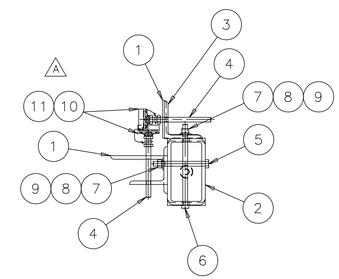

A EST. WT.: 433 LBS.

ITEM	PART NO.	DESCRIPTION OR SIZE	QTY.
11	COML.	WIRE, ø.064, 304 S.S. FIELD TIE ITEM #10 TO ITEM #4	A/R
10	MC-489745	SPACER FOR STAGGERED MODULES	2
9	COML.	LOCKWASHER, STD., 1/2" NOMINAL ZINC PLATED CARBON STEEL	4
8	COML.	FLAT WASHER, STD., 1/2" NOMINAL ZINC PLATED CARBON STEEL	4
7	COML.	HEX HD. NUT, STD., 1/2-13 UNC ZINC PLATED CARBON STEEL GR. 5	4
6	COML.	HEX HD. BOLT, 1/2-13 UNC X 8.50 LG. ZINC PLATED CARBON STEEL GR. 5	2
5	COML.	HEX HD. BOLT, 1/2-13 UNC X 5.50 LG. ZINC PLATED CARBON STEEL GR. 5	2
4	COML.	SWIVEL LEVELING MOUNT 1/2-13 X 6" LG. McMASTER-CARR P/N 6111K311	2
3	MB-489525	STOP ANGLE N.E. R.H.	2
2	MC-489518	CORNER COLUMN NE WELDMENT	1
1	MC-489509	BRACKET POST NE LOWER WELDMENT	1

PARTS LIST

UNLESS OTHERWISE SPECIFIED			ORIGINATOR	R.J.WOODS	15-FEB-2012
.XX	.XXX	ANGLES	DRAWN	W.CYKO	15-FEB-2012
± .06	± - -	± - -	CHECKED	J.RAUCH	28-FEB-2012
			APPROVED	R.WOODS	28-FEB-2012

1. BREAK ALL SHARP EDGES .03 MAX.
2. DO NOT SCALE DRAWING.
3. DIMENSIONS BASED UPON ASME Y14.5M-1994
4. MAX. ALL MACH. SURFACES 63
5. DRAWING UNITS: U.S. INCH

USED ON: ME-489547

MATERIAL: SEE PARTS LIST ABOVE

FERMI NATIONAL ACCELERATOR LABORATORY
UNITED STATES DEPARTMENT OF ENERGY

NOVA-EQUIPMENT HANDLING ASH RIVER PIVOTER CORNER POST N.E. ASSEMBLY

SCALE	DRAWING NUMBER	SHEET	REV
1:8	3929.220-MD-489534	1 OF 1	A

CREATED WITH : Ideas12NXSeries | GROUP: PPD/MECHANICAL DEPARTMENT

NOTICE: IMAGE OBTAINED FROM FERMILAB
Computer Aided Design Group.
This image is an uncontrolled document and may not be the current, approved version.

This information is provided for REFERENCE use only. Not for MANUFACTURE, or DESIGN INFORMATION. All information contained in this document represents work sponsored by an agency of the U.S. Government. Neither the U.S. Government nor any agency thereof, nor Universities Research Association, Inc., nor any of their employees or officers, makes any warranty, express or implied, or assumes any legal liability or responsibility for the accuracy, completeness, or usefulness of any information, apparatus, product or process disclosed, or represents that its use would not infringe privately owned rights.