REV	DESCRIPTION	DRAWN	DATE
		APPROVED	DATE
A	ADDED ITEMS 19 & 20	D.FRIEND	19-JUN-2012
		J.RAUCH	19-JUN-2012

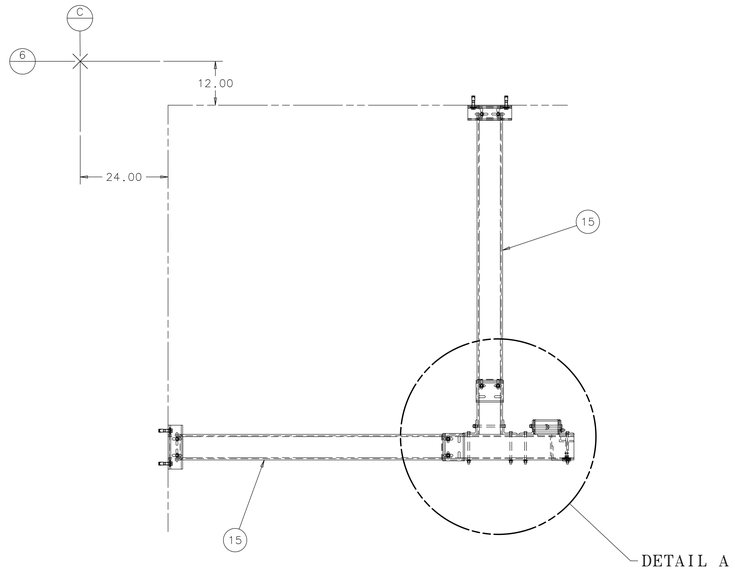

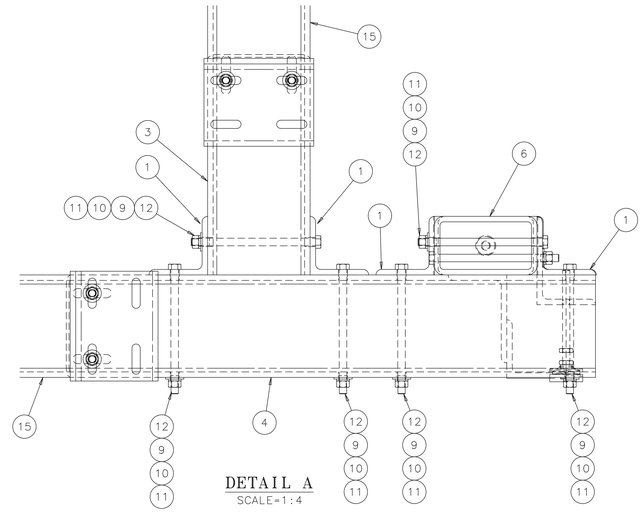

DETAIL A
SCALE=1:4

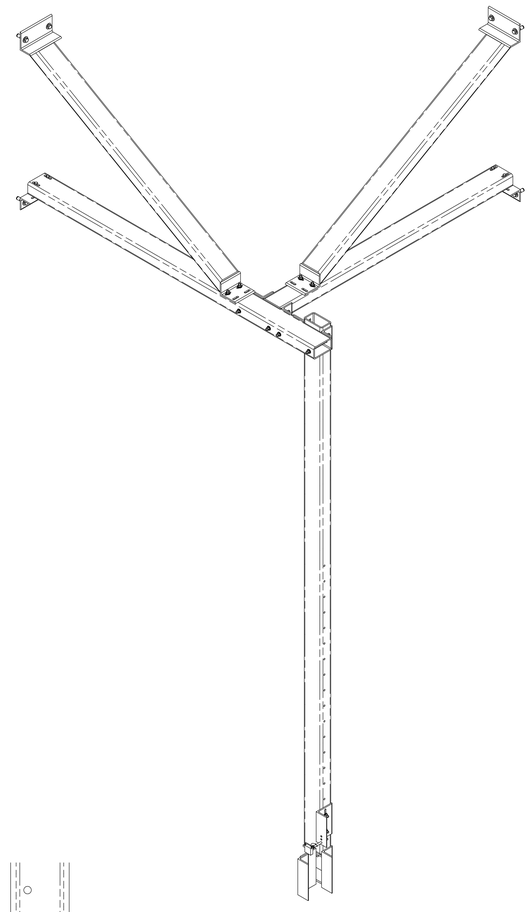

ISOMETRIC VIEW
SCALE=1:16

ESTIMATED WGHT = 1844 LBS

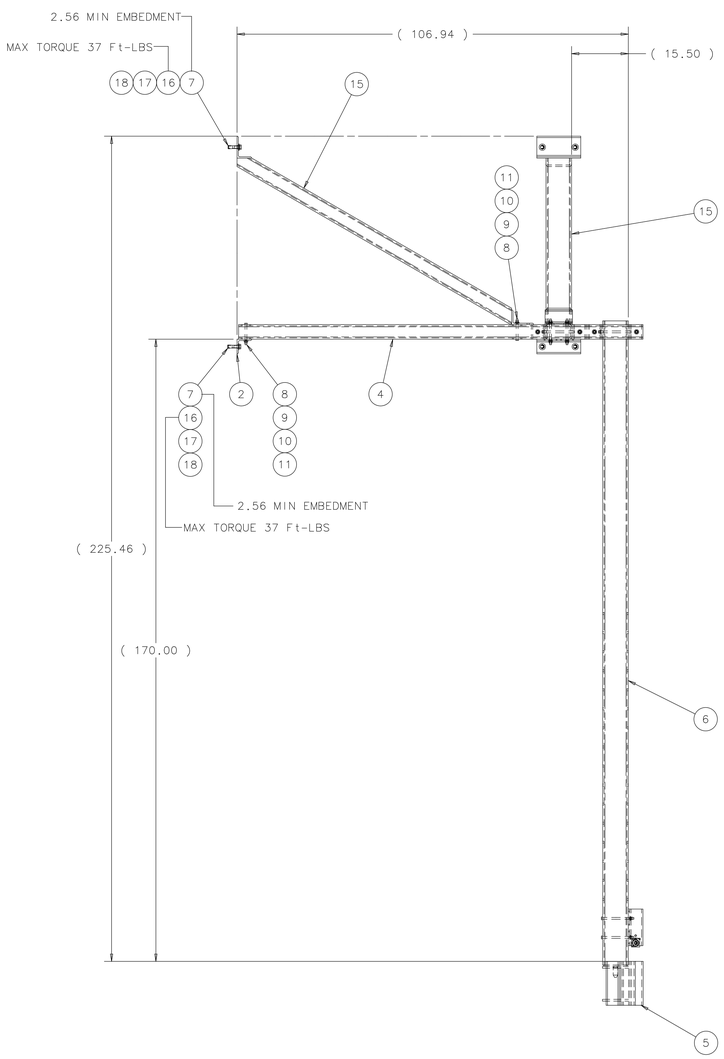

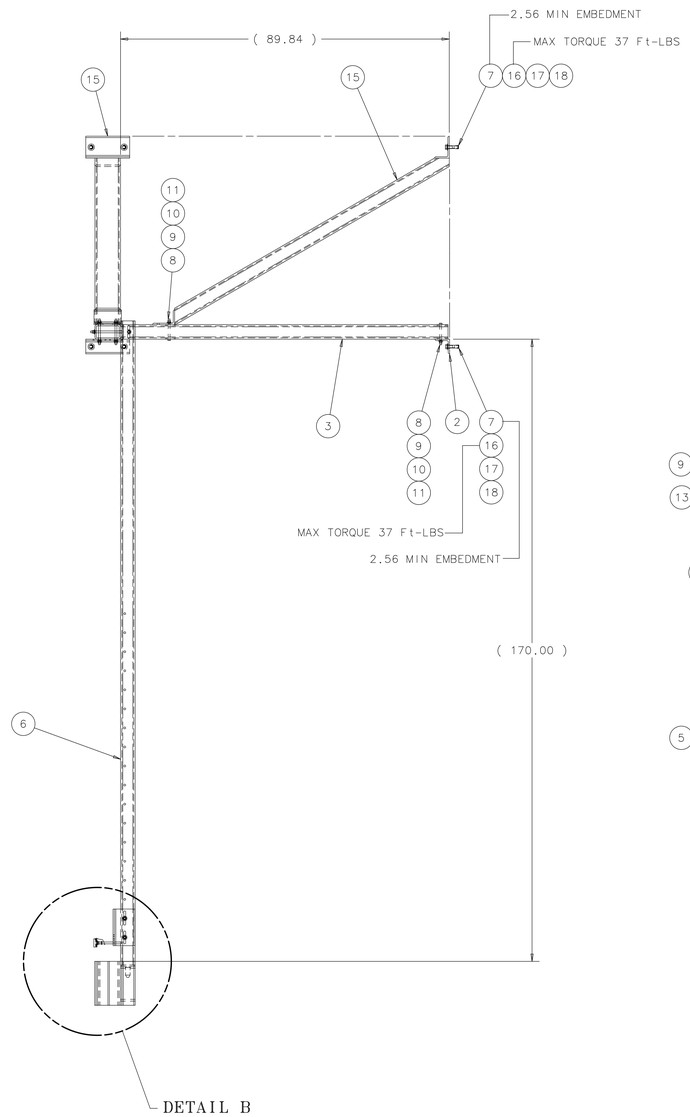

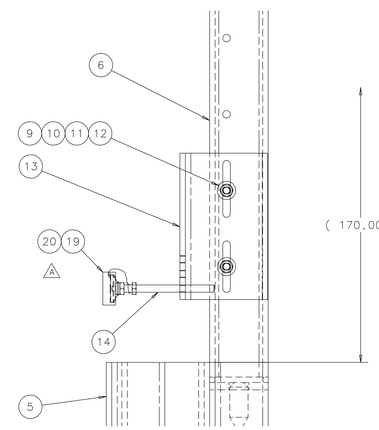

DETAIL B
SCALE=1:4

ITEM	PART NO.	DESCRIPTION OR SIZE	QTY.
A 20	COM'L.	WIRE, Ø.064", 304 S.S. FIELD TIE ITEM #19 TO ITEM #14	A/R
19	MC-489745	SPACER FOR STAGGERED MODULES	1
18	COM'L.	WASHER;FLAT;5/8 SCREW; ZINC PLATED CARBON STEEL GR. 5	8
17	COM'L.	WASHER;LOCK;5/8 SCREW; ZINC PLATED CARBON STEEL GR. 5	8
16	COM'L.	HEX HEAD CAP SCREW;5/8-11UNC X 1.50LG.; ZINC PLATED CARBON STEEL GR. 5	8
15	MC-489530	WELDMENT BRACE GUSSET-LONG	2
14	6111K311	SWIVEL LEVELING MOUNT;1/2-13UNC X 6.00 LG. BOLT;5000# LOAD;NICKEL PLATED;McMASTER-CARR	1
13	MB-489538	STOP ANGLE-VERT NE-LH	1
12	COM'L.	HEX HEAD CAP SCREW;1/2-13UNC X 8.50LG.; ZINC PLATED CARBON STEEL GR. 5	8
11	COM'L.	HEX NUT;1/2-13 UNC; ZINC PLATED CARBON STEEL GR. 5	16
10	COM'L.	WASHER;LOCK;1/2 SCREW; ZINC PLATED CARBON STEEL GR. 5	16
9	COM'L.	WASHER;FLAT;1/2 SCREW; ZINC PLATED CARBON STEEL GR. 5	16
8	COM'L.	HEX HEAD CAP SCREW;1/2-13UNC X 5.50LG.; ZINC PLATED CARBON STEEL GR. 5	8
7	00336428	DROP-IN ANCHOR;HDI 5/8; HILTI CORP. OR EQUIV.	8
6	MD-489528	CORNER COLUMN-NW WLDMT	1
5	MC-489541	BRACKET-POST NW LOWER WLDMT	1
4	MD-489536	BRACE TUBE-HORZ 110-50LG	1
3	MD-489533	BRACE TUBE-HORZ 89-50LG	1
2	MC-489513	ANGLE-BRACE SUPPORT	2
1	MB-489532	ANGLE-4X4X318X4 2HOLES	4

PARTS LIST

UNLESS OTHERWISE SPECIFIED			ORIGINATOR	R.J.WOODS	15-FEB-2012
.XX	.XXX	ANGLES	DRAWN	B.ELLISON	15-FEB-2012
± .05	± •••	± •••	CHECKED	J.RAUCH	29-FEB-2012
			APPROVED	R.J.WOODS	01-MAR-2012

1. BREAK ALL SHARP EDGES .015 MAX.
2. DO NOT SCALE DRAWING.
3. DIMENSIONS BASED UPON ASME Y14.5M-1994
4. MAX. ALL MACH. SURFACES 500
5. DRAWING UNITS: U.S. INCH

USED ON

MATERIAL
SEE PARTS LIST ABOVE

FERMI NATIONAL ACCELERATOR LABORATORY
UNITED STATES DEPARTMENT OF ENERGY

NOVA-EQUIPMENT HANDLING POST EAST HORZ STOP CORNER POST-NW

SCALE	DRAWING NUMBER	SHEET	REV
1:8 & AS NOTED	3929.200-ME-489531	1 OF 1	A

CREATED WITH : Ideas12NXSeries GROUP: PPD/MECHANICAL DEPARTMENT

NOTICE: IMAGE OBTAINED FROM FERMILAB Computer Aided Design Group.
This image is an uncontrolled document and may not be the current, approved version.
This information is provided for REFERENCE use only. Not for MANUFACTURE, or DESIGN INFORMATION. All information contained in this document represents work sponsored by an agency of the U.S. Government. Neither the U.S. Government nor any agency thereof, nor any of their employees, makes any warranty, or any of their employees or officers makes any warranty, express or implied, or assumes any legal liability or responsibility for the accuracy, completeness, or usefulness of any information, apparatus, product or process disclosed, or represents that its use would not infringe privately owned rights.