REV	DESCRIPTION	DRAWN	DATE
		APPROVED	DATE

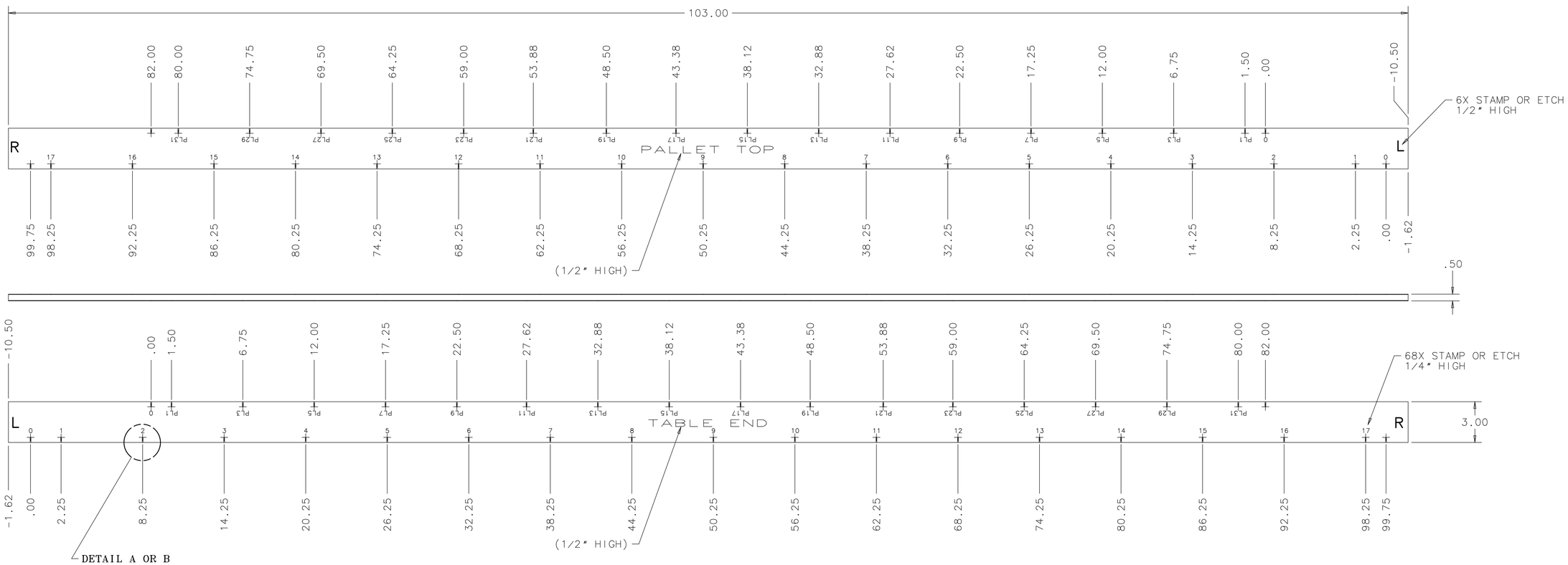

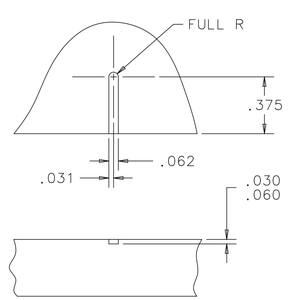

DETAIL A
(TYP 74 PLCS)
SCALE: 2:1

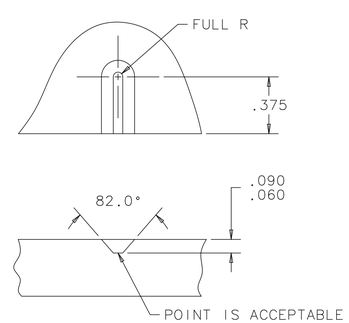

DETAIL B
DETAIL "A" - ALTERNATIVE
SCALE: 2:1

EST WT = 15.2 LBS

UNLESS OTHERWISE SPECIFIED			ORIGINATOR	D.FRIEND	08-NOV-2011
.XX	.XXX	ANGLES	DRAWN	V.MAJDANSKI	08-NOV-2011
± .12	± .060	± ---	CHECKED	D.FRIEND	29-NOV-2011
1. BREAK ALL SHARP EDGES .015 MAX. 2. DO NOT SCALE DRAWING. 3. DIMENSIONS BASED UPON ASME Y14.5M-1994 4. MAX. ALL MACH. SURFACES 125 5. DRAWING UNITS: U.S. INCH			APPROVED	D.FRIEND	29-NOV-2011
			USED ON	REF DWG MD-489388	
			MATERIAL	6061-T6 ALUMINUM	

FERMI NATIONAL ACCELERATOR LABORATORY
UNITED STATES DEPARTMENT OF ENERGY

NOVA-EQUIPMENT HANDLING SUPPORT EQUIPMENT FD PALLET FLATNESS QC BAR

SCALE	DRAWING NUMBER	SHEET	REV
1:4 & AS NOTED	3929.200-MD-489399	1 OF 1	

CREATED WITH : Ideas12NXSeries | GROUP: PPD/MECHANICAL DEPARTMENT

NOTICE: IMAGE OBTAINED FROM FERMILAB WEB SITE

This information is provided for REFERENCE use only. Not for MANUFACTURE, or DESIGN INFORMATION. All information contained in this document represents work sponsored by an agency of the U.S. Government. Neither the U.S. Government nor any agency thereof, nor Universities Research Association, Inc., nor any of their employees or officers, makes any warranty, express or implied, or assumes any legal liability or responsibility for the accuracy, completeness, or usefulness of any information, apparatus, product or process disclosed, or represents that its use would not infringe privately owned rights.