REV	DESCRIPTION	DRAWN / APPROVED	DATE / DATE
A	POWER UNIT PIPING ADDED; ADDED ITEM #47-SHIELDING BLK.	PAT POLL	8/22/2011
A'	ADDED ITEM 48-52, CHANGE QTY ON ITEMS 32, 41 & 42	J.RAUCH / D.PUSHKA	29-NOV-2011 / 01-DEC-2011
B	CHANGE 34&47 QTY, ADDED ITEMS 53-59,SECT E:E & F:F, SHT 4	J.RAUCH / E.VILLEGAS	12-APR-2012 / 01-MAY-2012
C	ADDED ITEM 60, CORRECT VIEW LABELS ON SHEET 2	D.FRIEND / D.PUSHKA	07-AUG-2012 / 08-AUG-2012

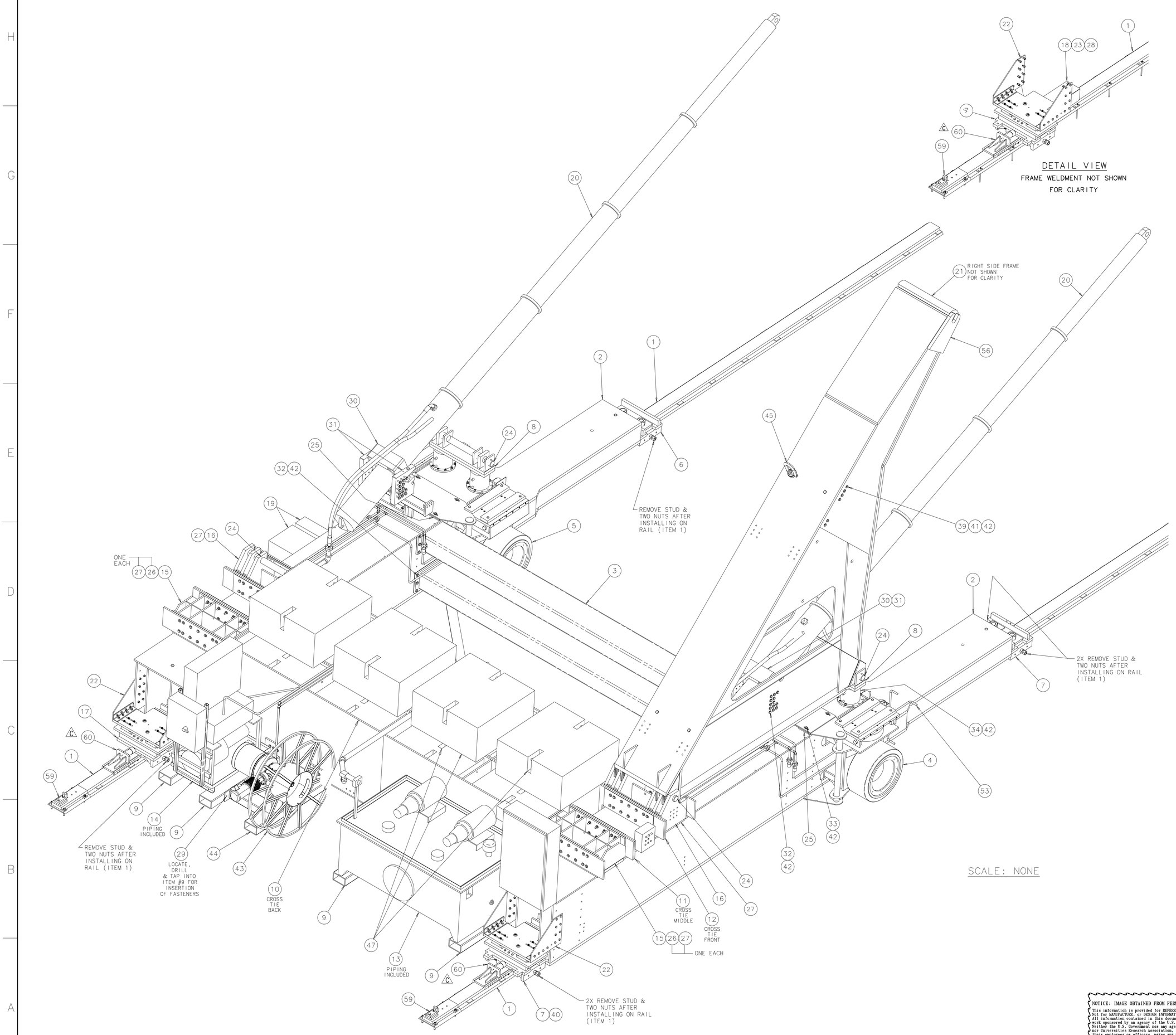

PARTS LIST CONTINUE ON SHEET 2

ITEM	PART NO.	DESCRIPTION OR SIZE	QTY.
46	ED-489097	ASH RIVER BLOCK PIVOTER 480 ELEC (NOT SHOWN)	1
45	COML	JERGENS 30 KIPS HOIST RING OR EQUIVALENT	2
44	MC-489072	AR REAR PLATFORM BEAM ASSY	1
43	REEL MD BNA361CN33-B617-RC-K04	PIVOTER CABLE REEL, MOTOR: 2HP, REEL: ø66, CONUCTIX/WAMPFLER MFG.	1
42	98119A036	WASHER;FLAT;3/4 SCREW; ASTM F436 TYPE 1 STEEL;McMASTER-CARR	424
41	93827A259	HEX NUT;3/4-10UNC; GR.8 STEEL;McMASTER-CARR	125
40	92620A896	HEX HEAD CAP SCREW;7/8-9UNC X 2.00 LG; GR.8 STEEL;McMASTER-CARR	12
39	92620A853	HEX HEAD CAP SCREW;3/4-10UNC X 4.50 LG; GR.8 STEEL;McMASTER-CARR	24
38	92620A857	HEX HEAD CAP SCREW;3/4-10UNC X 6-00 LG; GR.8 STEEL;McMASTER-CARR	88
37	91257A857	HEX HEAD CAP SCREW;3/4-10UNC X 5.50 LG; GR.8 STEEL;McMASTER-CARR	40
36	92620A849	HEX HEAD CAP SCREW;3/4-10UNC X 3.50 LG; GR.8 STEEL;McMASTER-CARR	28
35	91257A851	HEX HEAD CAP SCREW;3/4-10UNC X 4.00 LG; GR. 8 STEEL;McMASTER-CARR	40
34	91251A843	SOCKET HEAD CAP SCREW;3/4-10UNC X 2.00 LG; A574 STEEL;McMASTER-CARR	34
33	92620A845	HEX HEAD CAP SCREW;3/4-10UNC X 2.50 LG; GR. 8 STEEL;McMASTER-CARR	77
32	92620A846	HEX HEAD CAP SCREW;3/4-10UNC X 2.25 LG; GR. 8 STEEL;McMASTER-CARR	37
31	MD-489044	AR TRUNION MOUNT 2	4
30	COML	CYLINDER TRUNNION - PHELPS DWG NO 1018-C	2
29	P2542	UNISTRUT BRACKET, SLOTS UP & DN.	6
28	MC-486961	ROLLER BEARING, HILMAN, 300-XT	6
27	MC-486950	SHIM-2.00, CYLINDER PIVOT BRACKET	4
26	MC-486949	SHIM-1.00, CYLINDER PIVOT BRACKET	2
25	MB-486441	SHIM-DRIVE TORQUE RESTRAINT PLATE	4
24	MC-466592	PIN, ø4.00, FRONT PIVOT	4
23	MB-489207	HILLMAN ROLLER ALIGNMENT BUSHING	12
22	MD-489182	AR STEERING ASSY 3	2
21	ME-486361	FRAME UPPER 4 FLANGE WELDMENT	2
20	COML	HYDRAULIC CYLINDER-PHELPS MODEL 13.25-4-312-T-F-SA-C-75	2
19	BOSCH/REXROTH TBD	KNEELING CYLINDER PWR SUPPLY BOX	1
18	MC-486957	SHIM 1/4THK 300T HILMAN	6
17	MD-486947	PRELOAD GUIDE-SINGLE, LEFT HAND	1
16	ME-489053	BRACKET REAR 4 WELDMENT	2
15	ME-486884	BRACKET REAR 3 WELDMENT	2
14	ME-486977	DRIVE HYDRAULIC POWER UNIT	1
13	ME-489002	CYLINDER POWER UNIT & CONNECTIONS	1
12	ME-486912	FRONT CROSS TIE FRONT	1
11	ME-486933	REAR CROSS TIE MID	1
10	ME-486943	REAR CROSS TIE BACK ASSY	1
9	MD-486900	REAR PLATFORM BEAM ASSY	4
8	MD-466655	KNEELING CYLINDER BRACKET ASSY	2
7	MD-486407	DOUBLE GUIDE ROLLER ASSY	2
6	MD-486399	PRELOAD GUIDE - SINGLE	1
5	MD-486344	DRIVE AND RESTRAINT -2	1
4	MD-486340	DRIVE AND RESTRAINT -1	1
3	MD-486836	PIVOTER TIE FRONT WELDMENT	2
2	ME-466518	FRAME, LOWER WELDMENT 2	2
1	EXISTING IN BLDG.	ASH RIVER RAIL (REMOVE ALL LEVELING HARDWARE & CUT FLUSH)	--

PARTS LIST

UNLESS OTHERWISE SPECIFIED			ORIGINATOR	D.PUSHKA	01-MAR-2011
.XX	.XXX	ANGLES	DRAWN	P.POLL	02-MAR-2011
± .06	± ---	± ---	CHECKED	J.RAUCH	13-JUL-2011
1. BREAK ALL SHARP EDGES .015 MAX. 2. DO NOT SCALE DRAWING. 3. DIMENSIONS BASED UPON ASME Y14.5M-1994 4. MAX. ALL MACH. SURFACES --- √ 5. DRAWING UNITS: U.S.INCH			APPROVED	D.PUSHKA	13-JUL-2011
			USED ON	ME-489085	
			MATERIAL	SEE PARTS LIST ABOVE	

FERMI NATIONAL ACCELERATOR LABORATORY
UNITED STATES DEPARTMENT OF ENERGY

NOVA-EQUIPMENT HANDLING PIVOTER PIVOTER ASSEMBLY

SCALE	DRAWING NUMBER	SHEET	REV
1/32 & NOTED	3929.220-ME-486942	1 OF 4	C

CREATED WITH : Ideas12NXSeries GROUP: PPD/MECHANICAL DEPARTMENT

NOTICE: IMAGE OBTAINED FROM FERMILAB WEB SITE
This information is provided for REFERENCE use only. Not for MANUFACTURE, or DESIGN INFORMATION. All information contained in this document represents work sponsored by an agency of the U.S. Government. Neither the U.S. Government nor any agency thereof, nor Universities Research Association, Inc., nor any of their employees or officers, makes any warranty, express or implied, or assumes any legal liability or responsibility for the accuracy, completeness, or usefulness of any information, apparatus, product or process disclosed, or represents that its use would not infringe privately owned rights.

REV	DESCRIPTION	DRAWN / APPROVED	DATE / DATE
A	POWER UNIT PIPING ADDED; ADDED ITEM #47-SHIELDING BLK.	PAT POLL	8/22/2011
A'	ADDED ITEM 48-52, CHANGE QTY ON ITEMS 32, 41 & 42	J.RAUCH / D.PUSHKA	29-NOV-2011 / 01-DEC-2011
B	CHANGE 34&47 QTY, ADDED ITEMS 53-59,SECT E:E & F:F, SHT 4	J.RAUCH / E.VILLEGAS	12-APR-2012 / 01-MAY-2012
C	ADDED ITEM 60, CORRECT VIEW LABELS ON SHEET 2	D.FRIEND / D.PUSHKA	07-AUG-2012 / 08-AUG-2012

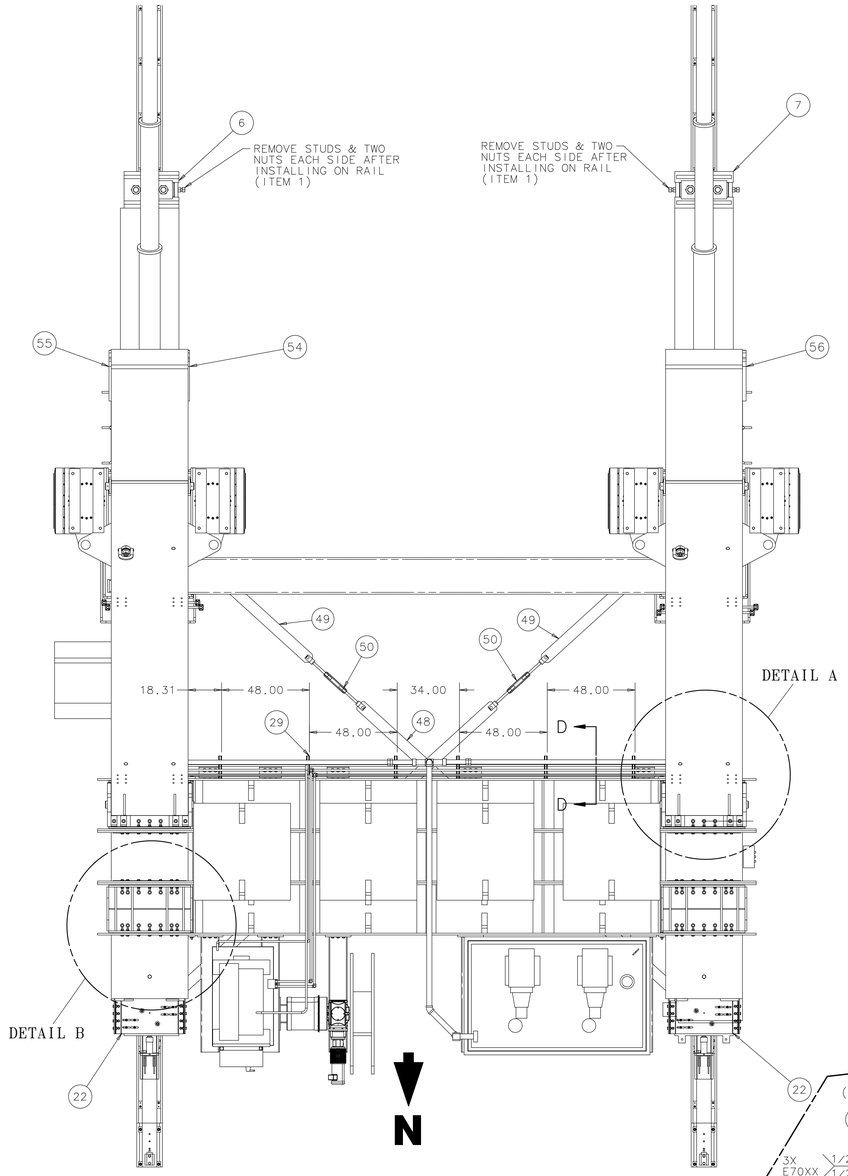

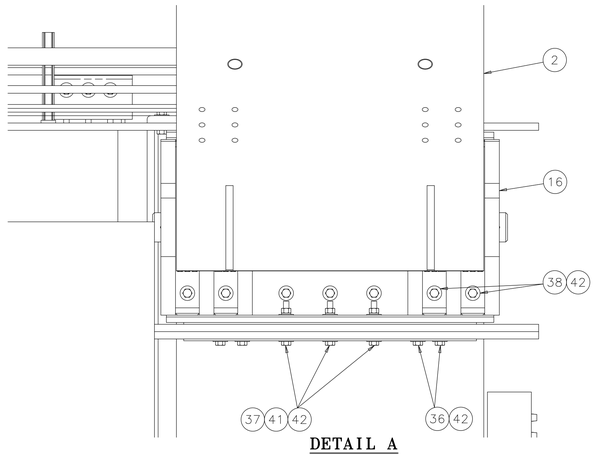

DETAIL A
SCALE 1:8

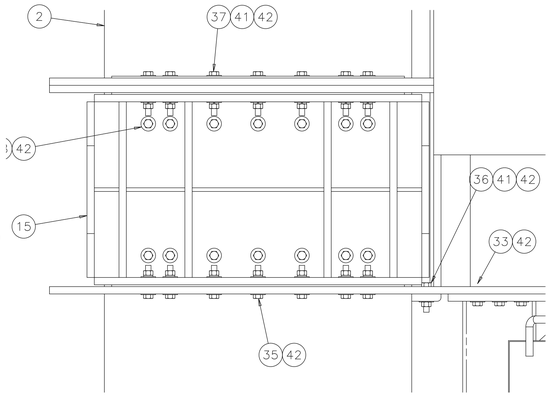

DETAIL B
SCALE 1:8

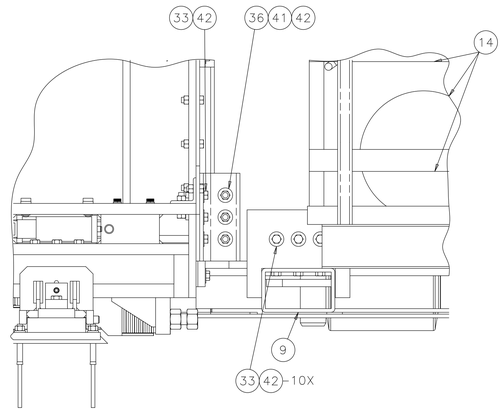

DETAIL C
SCALE 1:8

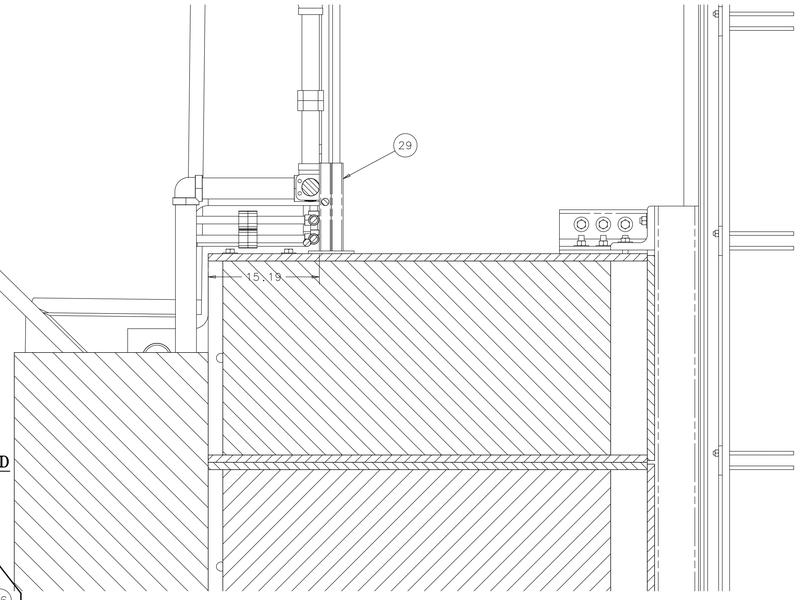

SECTION D-D
SCALE 1:8

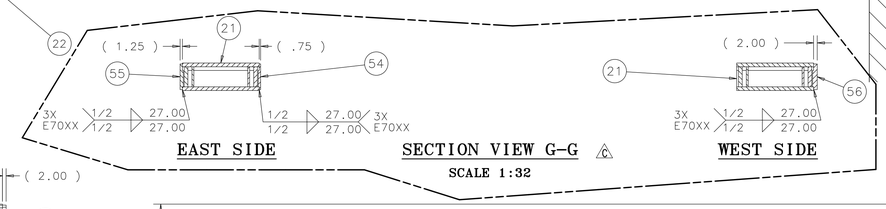

SECTION VIEW G-G
SCALE 1:32

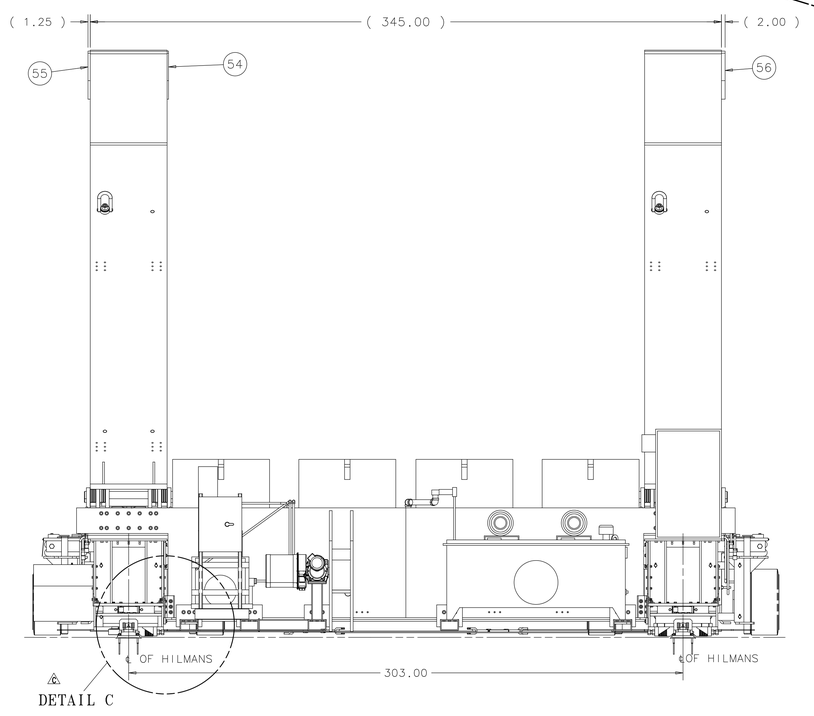

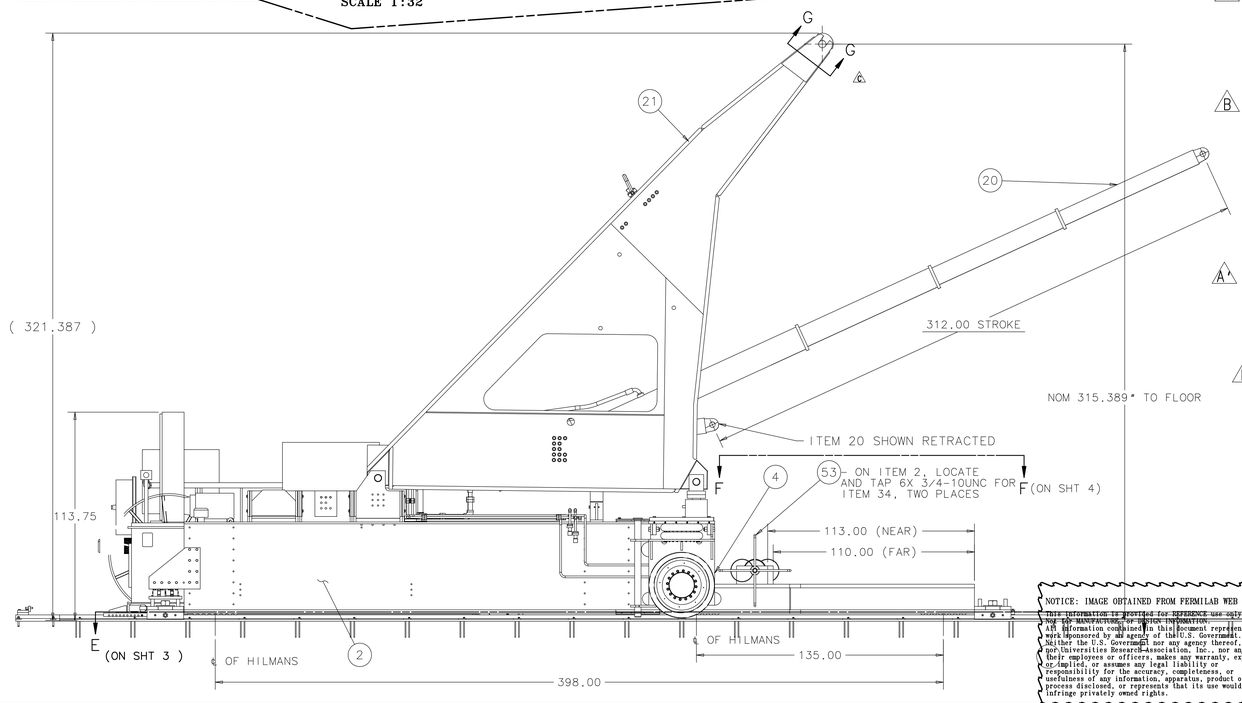

ITEM	PART NO.	DESCRIPTION OR SIZE	QTY.
60	MC-489767	AR PUSHER ASSY	2
59	MD-489643	AR PIVOTER RAIL STOP ASSY 1	2
58	MD-489489	FRONT CAM FOLLOWER ASSY, 3 WEST	1
57	MD-489486	FRONT CAM FOLLOWER ASSY, 3	1
56	MC-489628	SPACER OUTER YOKE WEST	1
55	MC-489627	SPACER OUTER YOKE EAST	1
54	MC-489626	SPACER INNER YOKE EAST	1
53	COML	THERN SPUR GEAR HAND WINCH DOUBLE REDUCTION, MODEL NO M492B-12 2	2
52	93827A271	HEX NUT, 7/8-9UNC GR 8 MCMASTER-CARR OR EQUIV.	4
51	91257A919	HEX HD CAP SCR, 7/8-9UNC X 4-1/2LG GR 8, MCMASTER- CARR	4
50	3001T72	TURNBUCKLE-JAW/JAW MCMASTER-CARR	2
49	MC-489410	PIVOTER LOWER X BRACE BAR 2	2
48	MC-489409	PIVOTER LOWER X BRACE BAR 1	2
47	COML	SHIELDING BLOCK, 26 X 52 X 52, W/ LIFITNG LUG; DURATEK	16

PARTS LIST

UNLESS OTHERWISE SPECIFIED .XX .XXX ANGLES ± .06 ± --- ± ---	ORIGINATOR	D.PUSHKA 01-MAR-2011
	DRAWN	P.POLL 02-MAR-2011
	CHECKED	J.RAUCH 13-JUL-2011
1. BREAK ALL SHARP EDGES .015 MAX. 2. DO NOT SCALE DRAWING. 3. DIMENSIONS BASED UPON ASME Y14.5M-1994 4. MAX. ALL MACH. SURFACES 5. DRAWING UNITS: U.S.INCH	APPROVED	D.PUSHKA 13-JUL-2011
	USED ON	ME-489085
	MATERIAL	SEE PARTS LIST ABOVE

FERMI NATIONAL ACCELERATOR LABORATORY
UNITED STATES DEPARTMENT OF ENERGY

NOVA-EQUIPMENT HANDLING PIVOTER PIVOTER ASSEMBLY

SCALE	DRAWING NUMBER	SHEET	REV
1/32 & NOTED	3929.220-ME-486942	2 OF 4	C

CREATED WITH : Ideas12NXSeries GROUP: PPD/MECHANICAL DEPARTMENT

NOTICE: IMAGE OBTAINED FROM FERMILAB WEB SITE
This information is provided for REFERENCE use only. NOT FOR MANUFACTURE OR DESIGN INFORMATION. All information contained in this document represents work sponsored by an agency of the U.S. Government. Neither the U.S. Government nor any agency thereof, nor Universities Research Association, Inc., nor any of their employees or officers, makes any warranty, express or implied, or assumes any legal liability or responsibility for the accuracy, completeness, or usefulness of any information, apparatus, product or process disclosed, or represents that its use would not infringe privately owned rights.

REV	DESCRIPTION	DRAWN / APPROVED	DATE / DATE
A	POWER UNIT PIPING ADDED; ADDED ITEM #47-SHIELDING BLK.	PAT POLL	8/22/2011
A'	ADDED ITEM 48-52, CHANGE QTY ON ITEMS 32, 41 & 42	J.RAUCH D.PUSHKA	29-NOV-2011 01-DEC-2011
B	CHANGE 34&47 QTY, ADDED ITEMS 53-59,SECT E:E & F:F, SHT 4	J.RAUCH E.VILLEGAS	12-APR-2012 01-MAY-2012
C	ADDED ITEM 60, CORRECT VIEW LABELS ON SHEET 2	D.FRIEND D.PUSHKA	07-AUG-2012 08-AUG-2012

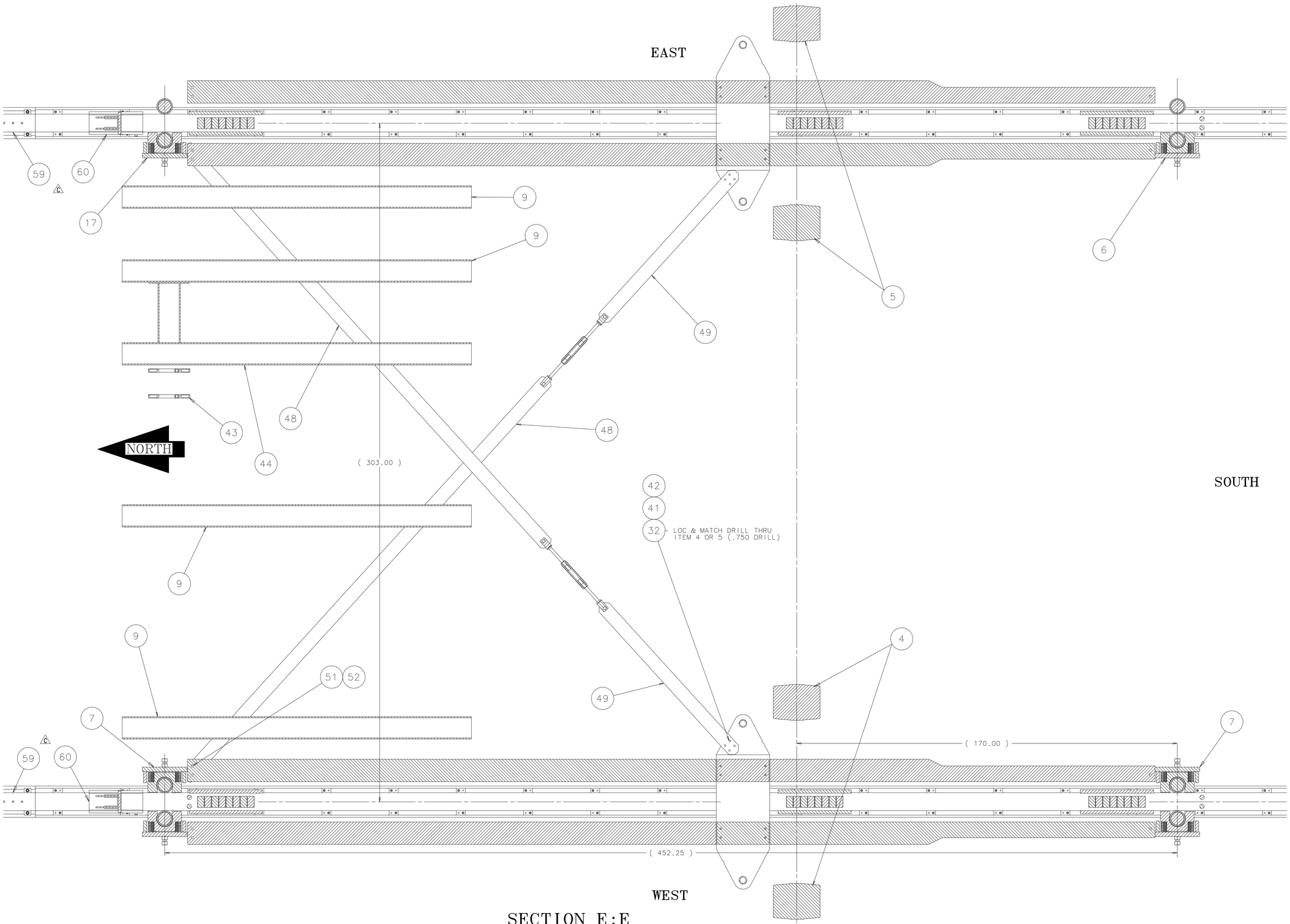

SECTION E:E

(FROM SHEET 2)

SCALE : 1/16

UNLESS OTHERWISE SPECIFIED			ORIGINATOR	D.PUSHKA	01-MAR-2011
.XX	.XXX	ANGLES	DRAWN	P.POLL	02-MAR-2011
± .06	± ---	± ---	CHECKED	J.RAUCH	13-JUL-2011
			APPROVED	D.PUSHKA	13-JUL-2011

1. BREAK ALL SHARP EDGES .015 MAX
2. DO NOT SCALE DRAWING.
3. DIMENSIONS BASED UPON ASME Y14.5M-1994
4. MAX. ALL MACH. SURFACES 125
5. DRAWING UNITS: U.S. INCH

USED ON: ME-489085

MATERIAL: SEE PARTS LIST ABOVE

FERMI NATIONAL ACCELERATOR LABORATORY
UNITED STATES DEPARTMENT OF ENERGY

NOVA-EQUIPMENT HANDLING
PIVOTER
PIVOTER ASSEMBLY

SCALE	DRAWING NUMBER	SHEET	REV
1/32 & NOTED	3929.220-ME-486942	3 OF 4	C

CREATED WITH : Ideas12NXSeries GROUP: PPD/MECHANICAL DEPARTMENT

NOTICE: IMAGE OBTAINED FROM FERMILAB WEB SITE
This information is provided for REFERENCE use only.
Not for MANUFACTURE, or DESIGN INFORMATION.
All information contained in this document represents work sponsored by an agency of the U.S. Government.
Neither the U.S. Government nor any agency thereof, nor Universities Research Association, Inc., nor any of their employees or officers, makes any warranty, express or implied, or assumes any legal liability or responsibility for the accuracy, completeness, or usefulness of any information, apparatus, product or process disclosed, or represents that its use would not infringe privately owned rights.

REV	DESCRIPTION	DRAWN / APPROVED	DATE / DATE
A	POWER UNIT PIPING ADDED; ADDED ITEM #47-SHIELDING BLK.	PAT POLL	8/22/2011
A'	ADDED ITEM 48-52, CHANGE QTY ON ITEMS 32, 41 & 42	J.RAUCH D.PUSHKA	29-NOV-2011 01-DEC-2011
B	CHANGE 34&47 QTY, ADDED ITEMS 53-59,SECT E:E & F:F, SHT 4	J.RAUCH E.VILLEGAS	12-APR-2012 01-MAY-2012
C	ADDED ITEM 60, CORRECT VIEW LABELS ON SHEET 2	D.FRIEND D.PUSHKA	07-AUG-2012 08-AUG-2012

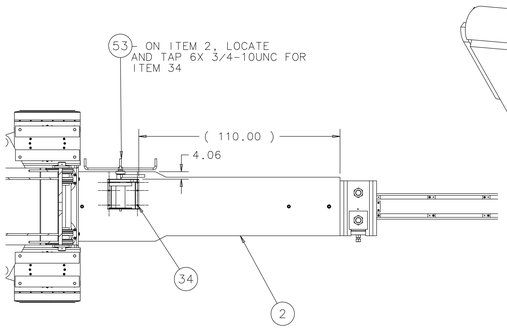

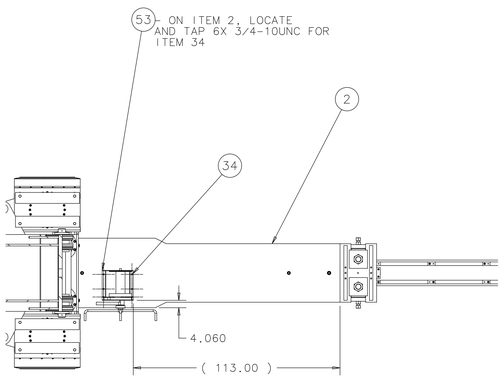

SECTION F:F
(FROM SHEET 2)
SCALE 1:32

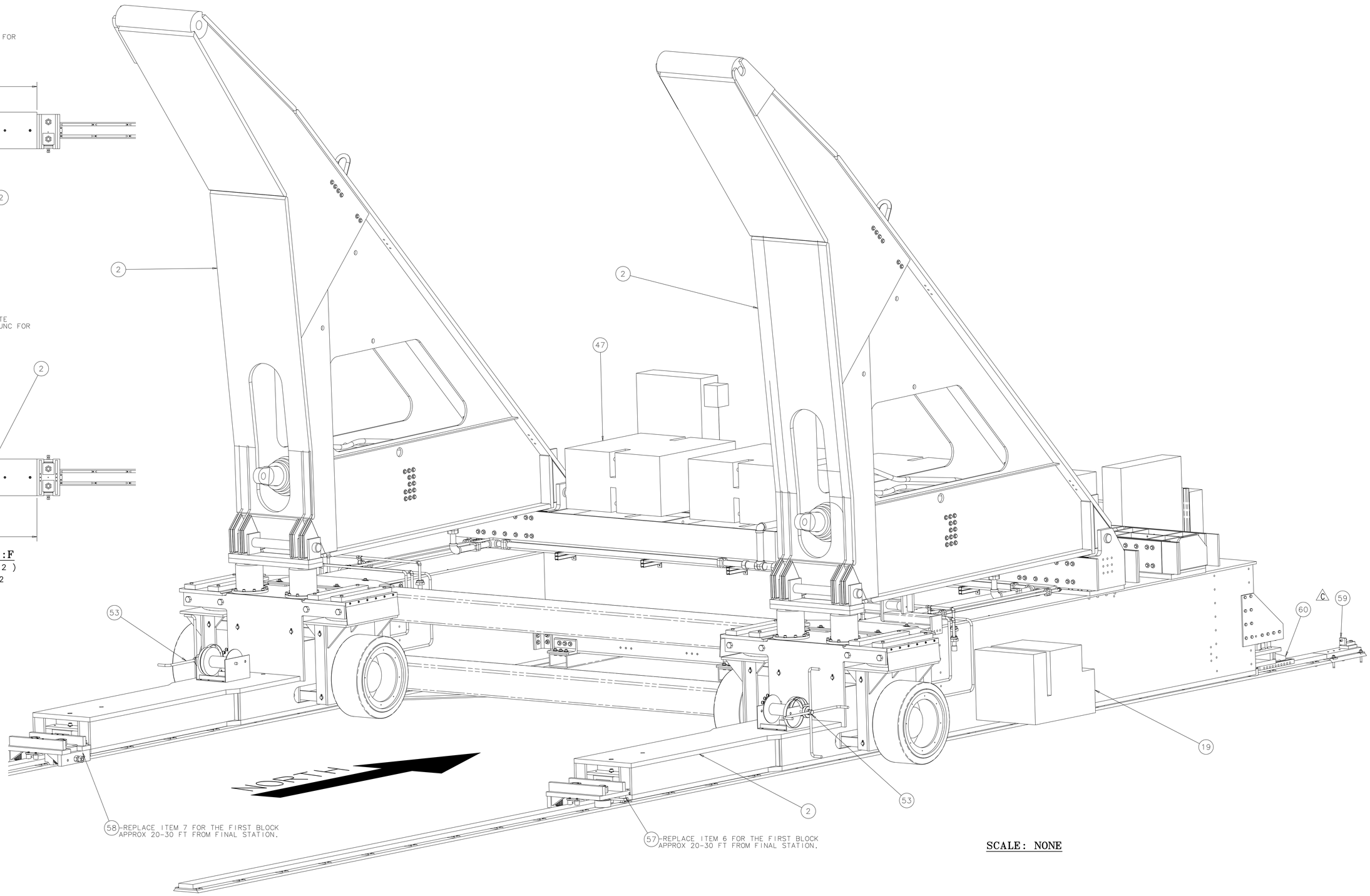

SCALE: NONE

UNLESS OTHERWISE SPECIFIED			ORIGINATOR	D.PUSHKA	01-MAR-2011
.XX	.XXX	ANGLES	DRAWN	P.POLL	02-MAR-2011
± .06	± ---	± ---	CHECKED	J.RAUCH	13-JUL-2011
1. BREAK ALL SHARP EDGES .015 MAX. 2. DO NOT SCALE DRAWING. 3. DIMENSIONS BASED UPON ASME Y14.5M-1994 4. MAX. ALL MACH. SURFACES			APPROVED	D.PUSHKA	13-JUL-2011
			USED ON	ME-489085	
5. DRAWING UNITS: U.S. INCH			MATERIAL	SEE PARTS LIST ABOVE	

FERMI NATIONAL ACCELERATOR LABORATORY
UNITED STATES DEPARTMENT OF ENERGY

NOVA-EQUIPMENT HANDLING
PIVOTER
PIVOTER ASSEMBLY

SCALE	DRAWING NUMBER	SHEET	REV
1/32 & NOTED	3929.220-ME-486942	4 OF 4	C

CREATED WITH : Ideas12NXSeries | GROUP: PPD/MECHANICAL DEPARTMENT

NOTICE: IMAGE OBTAINED FROM FERMILAB WEB SITE
This information is provided for REFERENCE use only.
Not for MANUFACTURE, or DESIGN INFORMATION.
All information contained in this document represents work sponsored by an agency of the U.S. Government.
Neither the U.S. Government nor any agency thereof, nor Universities Research Association, Inc., nor any of their employees or officers, makes any warranty, express or implied, or assumes any legal liability or responsibility for the accuracy, completeness, or usefulness of any information, apparatus, product or process disclosed, or represents that its use would not infringe privately owned rights.