| REV | DESCRIPTION | DRAWN | DATE |
|---|---|---|---|
| | | APPROVED | DATE |

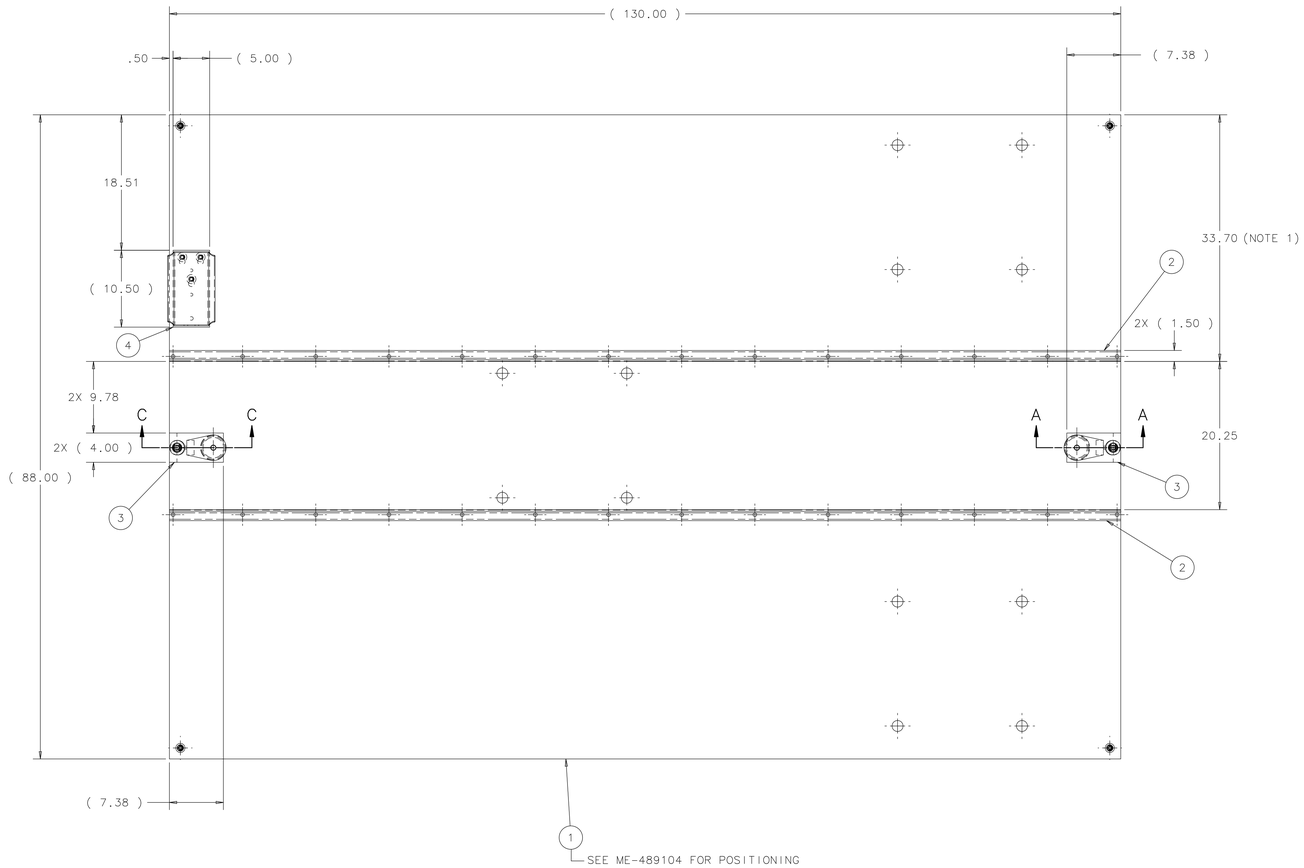


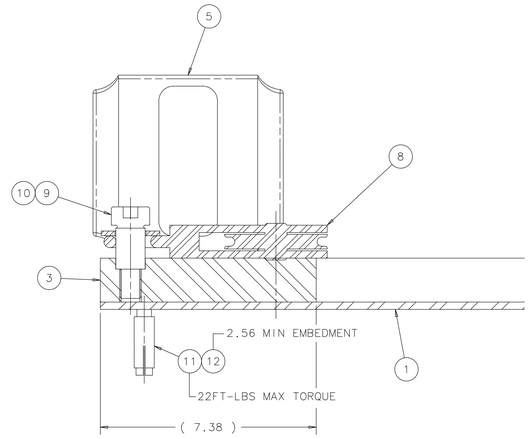


SECTION C-C
SCALE=1:2

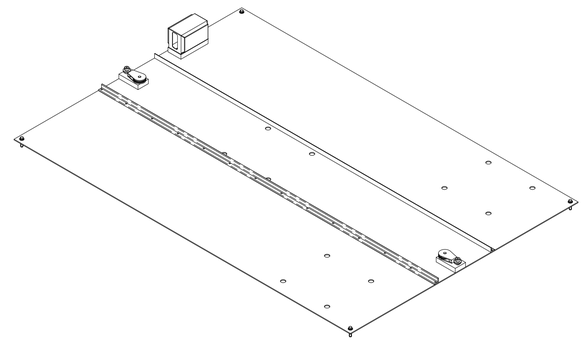

ISOMETRIC VIEW
SCALE=1:16

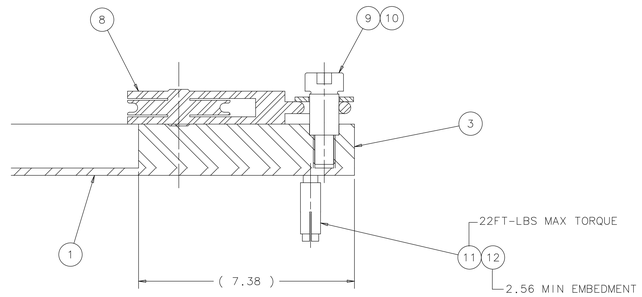


SECTION A-A
SCALE=1:2

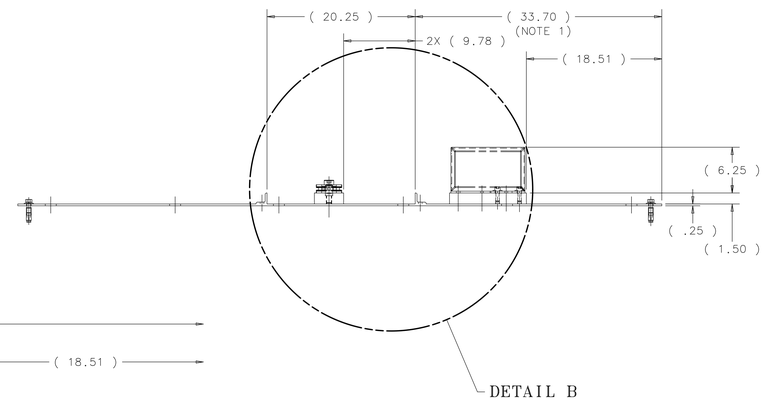


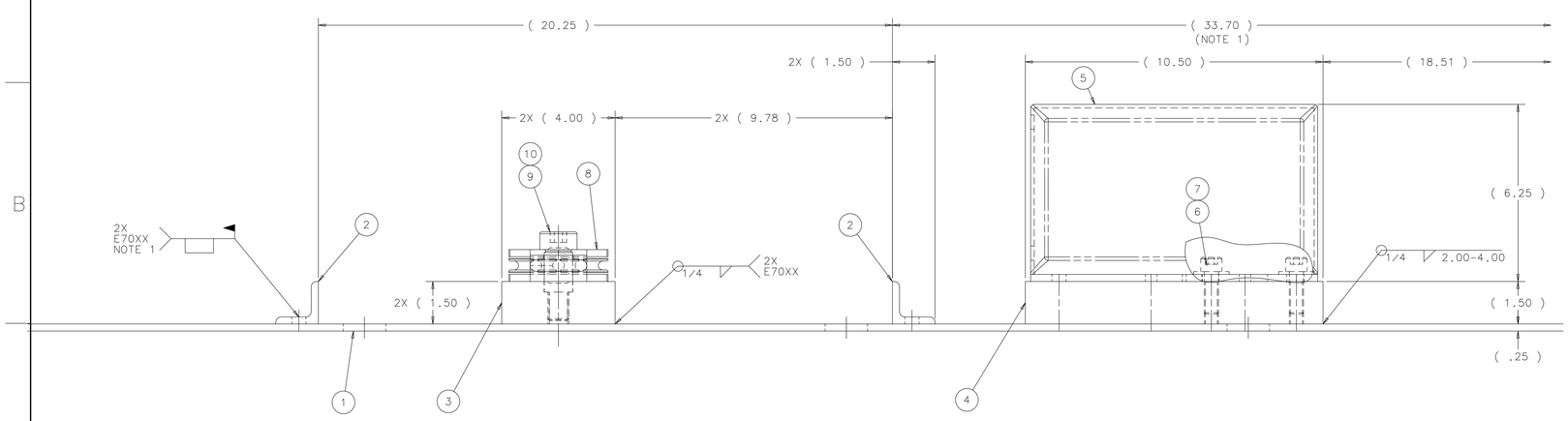


DETAIL B
SCALE=1:2

NOTE:
1. DETERMINED POSITION AT ASSEMBLY TO ME-489451.

| ITEM | PART NO. | DESCRIPTION OR SIZE | QTY. |
|---|---|---|---|
| 12 | COM'L. | DROP-IN ANCHOR;HDI 1/2; HILTI ITEM #00336427 OR EQUIV. | 4 |
| 11 | COM'L. | HEX HEAD CAP SCREW;1/2-13 UNC X 1-1/2 LG.;CARBON STEEL | 4 |
| 10 | 98038A282 | FLAT WASHER;2.00 O.D.X 1-1/16 I.D.X .16 THK.; STEEL;McMASTER-CARR | 2 |
| 9 | 91259A132 | SHOULDER SCREW;1.50 LG. X 3/4-10 UNC THRD.; ALLOY STEEL;McMASTER-CARR | 2 |
| 8 | 3099T21 | SINGLE PULLEY BLOCK;5/16 DIA. WIRE ROPE,WLL 1550#;McMASTER-CARR | 2 |
| 7 | COM'L. | FLAT WASHER;1/2 SCREW; CARBON STEEL | 3 |
| 6 | COM'L. | SOCKET HEAD CAP SCREW;1/2-13 UNC X 1-1/2 LG.;CARBON STEEL | 3 |
| 5 | 9354T42 | 115VAC HORIZONTAL WINCH;25FT. 7/32 DIA. WIRE ROPE W/HOOK;2700# FIRST LAYER,1860# HALF DRUM; McMASTER-CARR | 1 |
| 4 | MC-489561 | WINCH ANCHOR BLOCK | 1 |
| 3 | MC-489560 | PULLEY ANCHOR | 2 |
| 2 | MD-489562 | GUIDE HORIZ ANGLES | 2 |
| 1 | MC-489220 | SLIDE PLATE | 1 |

PARTS LIST

| UNLESS OTHERWISE SPECIFIED | | | ORIGINATOR | E.VILLEGAS | 24-FEB-2012 |
|---|---|---|---|---|---|
| .XX | .XXX | ANGLES | DRAWN | B.ELLISON | 24-FEB-2012 |
| ± .06 | ± ••• | ± ••• | CHECKED | J.RAUCH | 07-MAR-2012 |
| 1. BREAK ALL SHARP EDGES .015 MAX. 2. DO NOT SCALE DRAWING. 3. DIMENSIONS BASED UPON ASME Y14.5M-1994 4. MAX. ALL MACH. SURFACES 125 5. DRAWING UNITS: U.S. INCH | | | APPROVED | D.PUSHKA | 07-MAR-2012 |
| | | | USED ON | ME-489451 | |
| | | | MATERIAL | SEE PARTS LIST ABOVE | |

FERMI NATIONAL ACCELERATOR LABORATORY
UNITED STATES DEPARTMENT OF ENERGY

# NOVA-FAR_DETECTOR BLOCK PIVOTER SLIDE PLATE ASSEMBLY

| SCALE | DRAWING NUMBER | SHEET | REV |
|---|---|---|---|
| 1:8 & AS NOTED | 3929.330-ME-489559 | 1 OF 1 | |

CREATED WITH : Ideas12NXSeries GROUP: PPD/MECHANICAL DEPARTMENT


NOTICE: IMAGE OBTAINED FROM FERMILAB WEB SITE
This information is provided for REFERENCE use only. Not for MANUFACTURE, or DESIGN INFORMATION. All information contained in this document represents work sponsored by an agency of the U.S. Government. Neither the U.S. Government nor any agency thereof, nor Universities Research Association, Inc., nor any of their employees or officers, makes any warranty, express or implied, or assumes any legal liability or responsibility for the accuracy, completeness, or usefulness of any information, apparatus, product or process disclosed, or represents that its use would not infringe privately owned rights.