REV	DESCRIPTION	DRAWN	DATE
		APPROVED	DATE

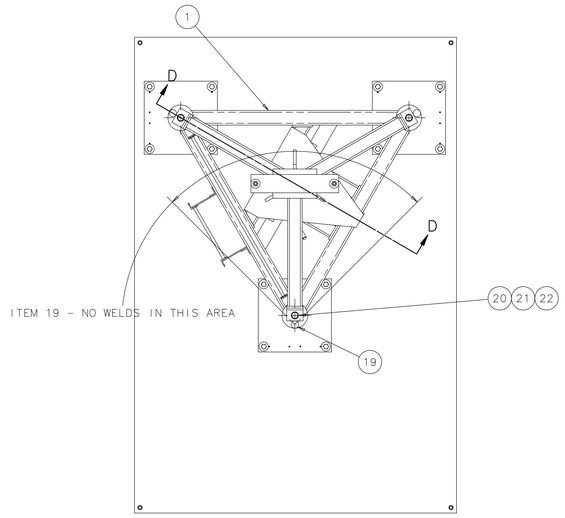

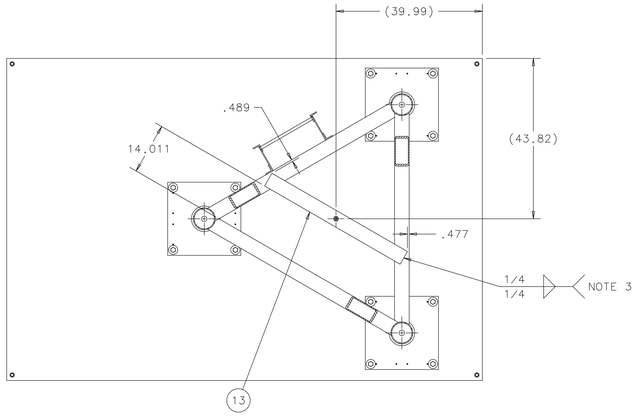

SECTION A-A

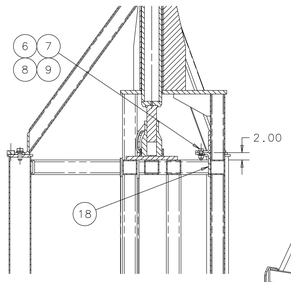

SECTION D-D

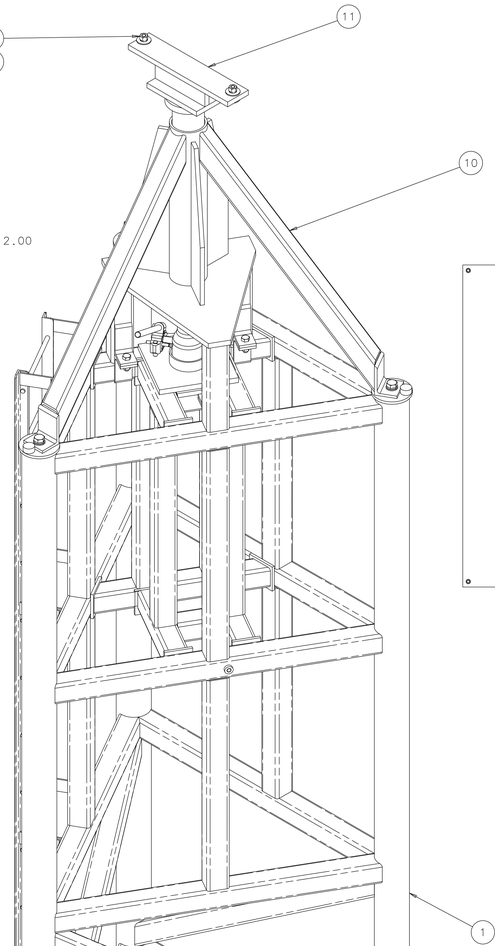

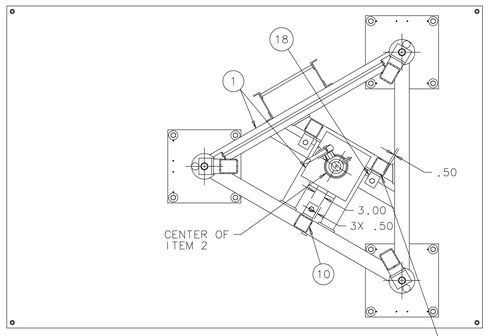

SECTION C-C

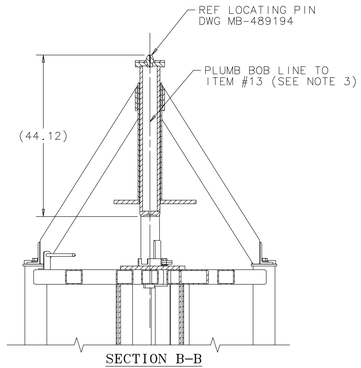

SECTION B-B

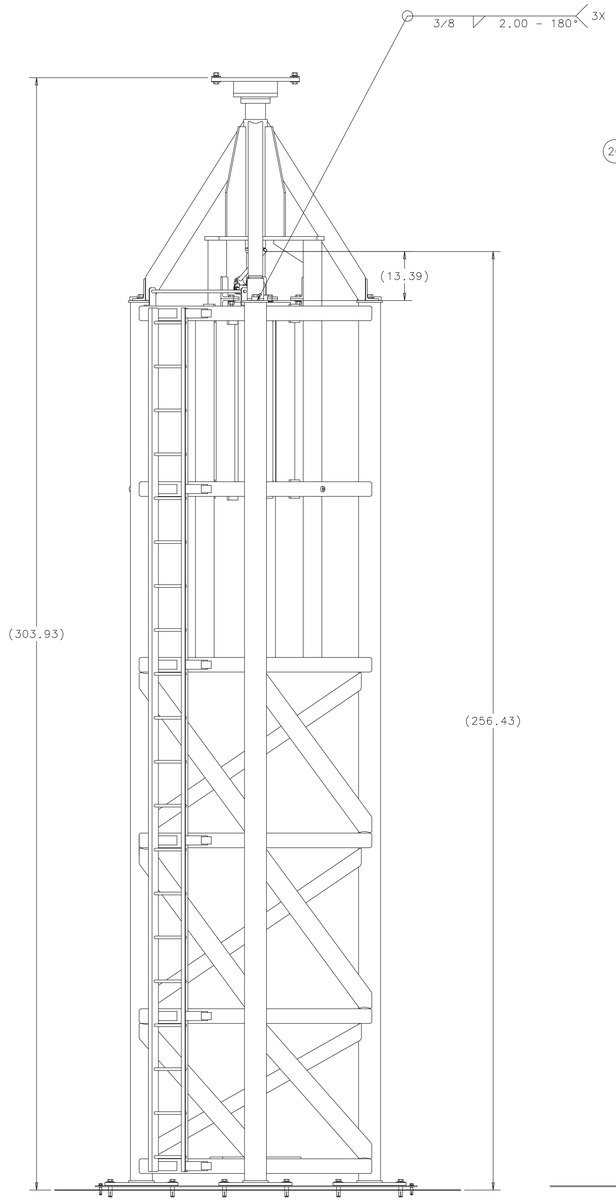

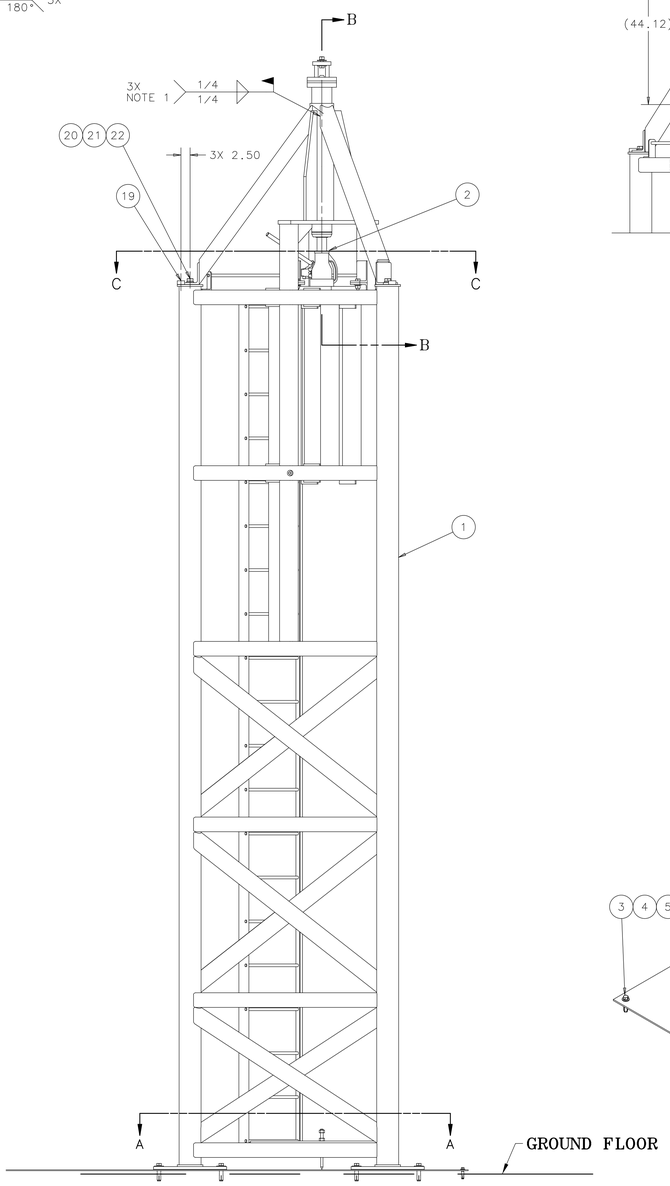

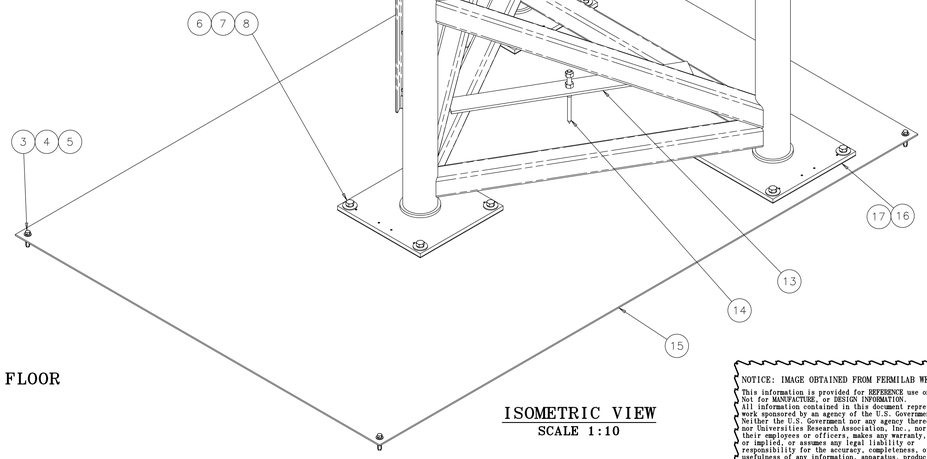

ISOMETRIC VIEW
SCALE 1:10

NOTES:

1. ATTACH ITEM 10 (DUNNAGE TOWER EXTENSION) TO ITEM 1 BY CENTERING LOCATING PIN DWG MB-489194 OVER 1.00 HOLE OF ITEM NO. 1.
2. PLACE ITEM 2 (JACK) INTO RING FEATURE ATOP ITEM 1 (DUNNAGE WELDMENT).
3. REMOVE ITEM 2 AND 11 THEN PLUMB BOB THRU LOCATING PIN DWG MB-489194 TO LOCATE 3/4 TAP IN ITEM 13 WITHIN ø1/8 TRUE POSITION BEFORE WELDING.

EST WT = 5563 LBS

ITEM	PART NO.	DESCRIPTION OR SIZE	QTY.
22	91101A038	WASHER, LOCK,PLAIN STEEL,1IN BOLT	3
21	91081A038	WASHER, PLAIN STEEL, 1IN BOLT	3
20	91571A332	SCREW, HHHSB, 1-8UNC X 2 1/2LG	3
19		PIN SHEAR-STEEL,A36, ø2.00X1.00LG	3
18	MB-489448	TIE BRACKET - 2	6
17	MCMASTER CARR 93085A540	100° FL HD SCREW 1/4-20 UNC X .75 LG MIL 24693-C96	24
16	MC-489221	TABLE DUNNAGE SLIDE PAD	6
15	MC-489220	TABLE DUNNAGE SLIDE PLATE	1
14	MB-489230	LOCATOR ASSY	1
13	MB-489228	LOCATOR POINTER BAR	1
12	1288K13	ANTI-SEIZE LUBRICANT, McMASTER CARR	AR
11	MC-489226	DUNNAGE JACK SPACER WLDNT	1
10	MD-489450	DUNNAGE TOWER EXTENSION ASSY-BOLTED	1
9	COML	NUT, HEX; 3/4-10 UNC; GR 8 STL	2
8	COML	SCREW, HX HD: 3/4-10 UNC X 2.50 LG. 18-8 S.S.	14
7	COML	WASHER, LOCK: 3/4" HOLE, 18-8 S.S.	14
6	COML	WASHER, FLAT, OVERSIZED: 3/4" HOLE, ø2.50 O.D.18-8 S.S.	16
5	COML	SCREW, HX HD: 1/2-13 UNC X 1.50 LG. GR 8 STL	4
4	COML	WASHER, LOCK: 1/2" HOLE, 18-8 S.S.	4
3	COML	WASHER, FLAT: 1/2" HOLE, 18-8 S.S.	4
2	FERMI-SUPPLIED	SIMPLEX SUPERJACK - A3510D 35 TON 5.00" STROKE	1
1	ME-466968	PIVOTER TABLE DUNNAGE WELDMENT	1

PARTS LIST

UNLESS OTHERWISE SPECIFIED					
.XX	.XXX	ANGLES	ORIGINATOR	E.VILLEGAS	11-JAN-2012
± .06	± -	± 1°	DRAWN	J.RAUCH	11-JAN-2012
			CHECKED	J.RAUCH	13-JAN-2012
			APPROVED	E.VILLEGAS	13-JAN-2012

1. BREAK ALL SHARP EDGES .015 MAX.
2. DO NOT SCALE DRAWING.
3. DIMENSIONS BASED UPON ASME Y14.5M-1994
4. MAX. ALL MACH. SURFACES 250
5. DRAWING UNITS: U.S. INCH

USED ON: ME-489104

MATERIAL: SEE PARTS LIST ABOVE

FERMI NATIONAL ACCELERATOR LABORATORY
UNITED STATES DEPARTMENT OF ENERGY

NOVA-FAR_DETECTOR
BLOCK PIVOTER
PIVOTERTABLE DUNNAGE ASSY-BOLTED

SCALE	DRAWING NUMBER	SHEET	REV
1:32 & AS NOTED	3929.330-ME-489451	1 OF 1	

CREATED WITH : Ideas12NXSeries GROUP: PPD/MECHANICAL DEPARTMENT

NOTICE: IMAGE OBTAINED FROM FERMILAB WEB SITE

This information is provided for REFERENCE use only. Not for MANUFACTURE, or DESIGN INFORMATION. All information contained in this document represents work sponsored by an agency of the U.S. Government. Neither the U.S. Government nor any agency thereof, nor Universities Research Association, Inc., nor any of their employees or officers, makes any warranty, express or implied, or assumes any legal liability or responsibility for the accuracy, completeness, or usefulness of any information, apparatus, product or process disclosed, or represents that its use would not infringe privately owned rights.