REV	DESCRIPTION	DRAWN	DATE
		APPROVED	DATE

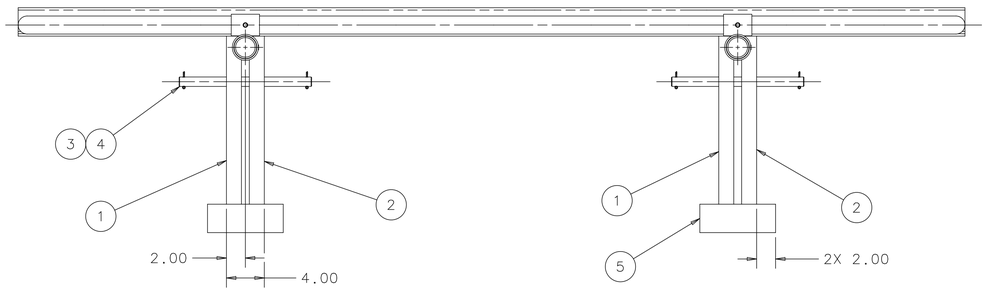

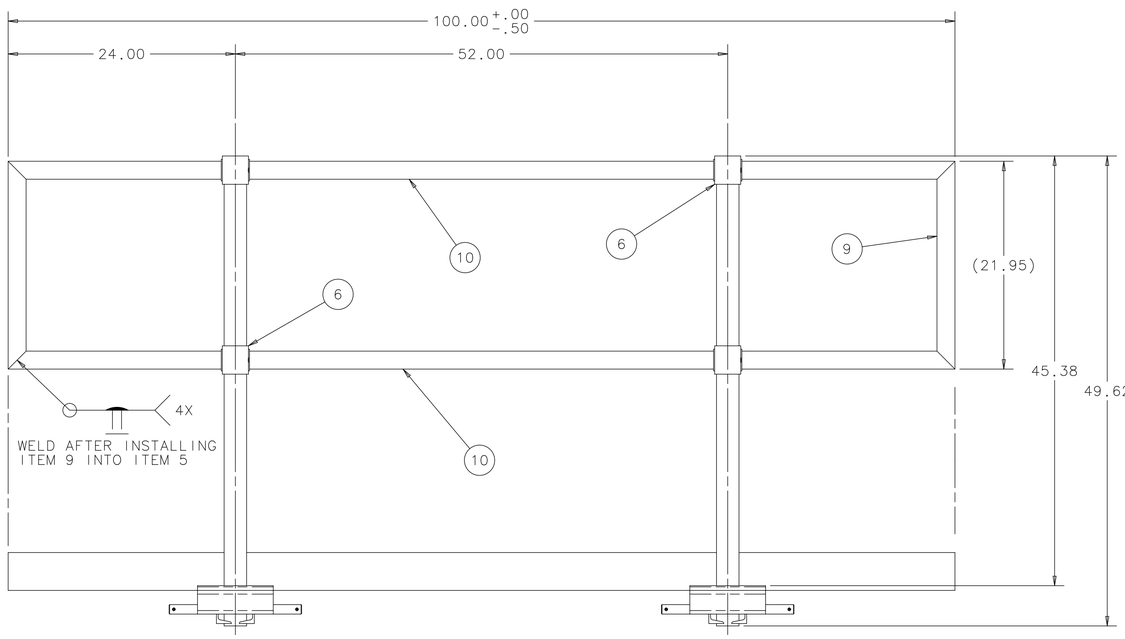

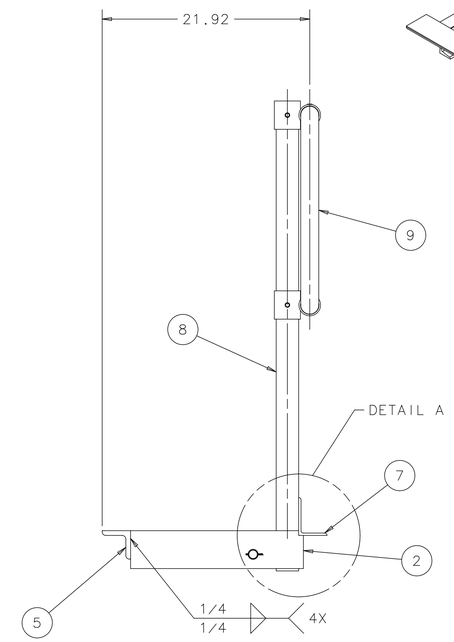

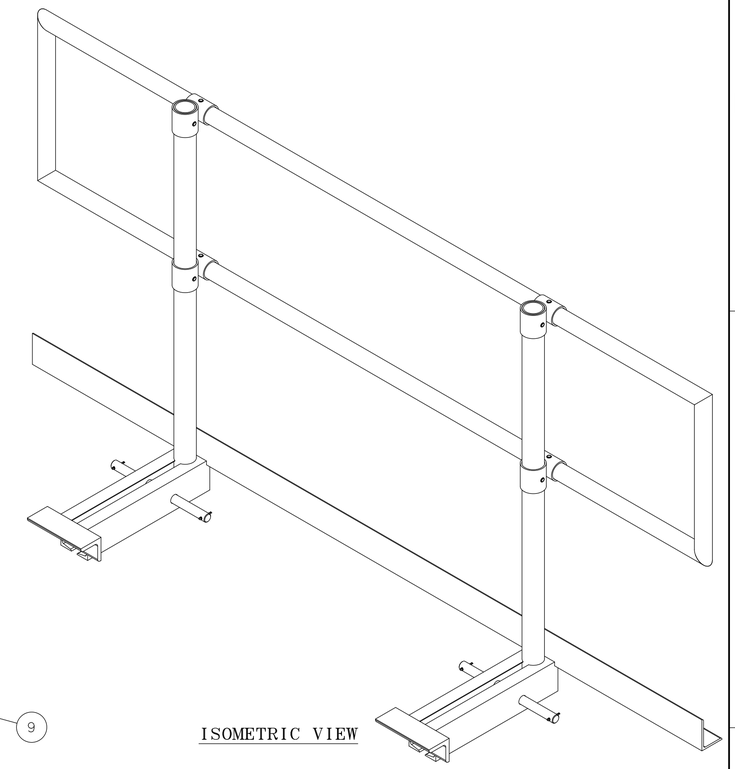

ISOMETRIC VIEW

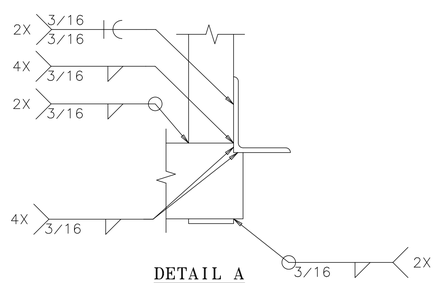

DETAIL A
SCALE: 1:4

EST WT = 68.5 LBS

ITEM	PART NO.	DESCRIPTION OR SIZE	QTY.
10	MB-489298	ALUM PIPE ø1.50 RAIL	2
9	MB-489299	ALUM PIPE ø1.50 RAIL VERT	2
8	COML	PIPE, 2 NPS, SCH. 40, 49.62 LG. 6061-T6 ALUM	2
7	COML	ANGLE, 4 X 3 X 1/4 THK X 100.00 LG. ALUM 6061-T6	1
6	45-98	CROSSOVER CONNECTOR, 2" X 1-1/2" ALUM, KEE PRODUCTS	4
5	COML	ANGLE, 3 X 3 X 1/2 THK X 8.00 LG. ALUM 6061-T6	2
4	98338A230	PIN, COTTER ø5/32 X 1-1/2 LG. STL. ZINC PLATED, McMASTER-CARR; OR EQUIV.	4
3	MB-489302	PIN, ø1.00 X 14.00 LG.	2
2	MC-489309	CHANNEL, ALUM 4 X 1.58 - LH	2
1	MC-489301	CHANNEL, ALUM 4 X 1.58	2

PARTS LIST

UNLESS OTHERWISE SPECIFIED					
.XX	.XXX	ANGLES	ORIGINATOR	R.J.WOODS	10-AUG-2011
± .02	± ---	± ---	DRAWN	V.MAJDANSKI	10-AUG-2011
			CHECKED	J.RAUCH	26-AUG-2011
			APPROVED	R.J.WOODS	26-AUG-2011

1. BREAK ALL SHARP EDGES .015 MAX.
2. DO NOT SCALE DRAWING.
3. DIMENSIONS BASED UPON ASME Y14.5M-1994
4. MAX. ALL MACH. SURFACES 125
5. DRAWING UNITS: US INCHES

USED ON

MATERIAL
SEE PARTS LIST ABOVE

FERMI NATIONAL ACCELERATOR LABORATORY
UNITED STATES DEPARTMENT OF ENERGY

NOVA-FAR_DETECTOR
ASSEMBLY TABLE SOUTH
ALUM RAILING WELDMENT

SCALE	DRAWING NUMBER	SHEET	REV
1:8 & AS NOTED	3929.330-MD-489297	1 OF 1	

CREATED WITH : Ideas12NXSeries | GROUP: PPD/MECHANICAL DEPARTMENT