REV	DESCRIPTION	DRAWN	DATE
		APPROVED	DATE

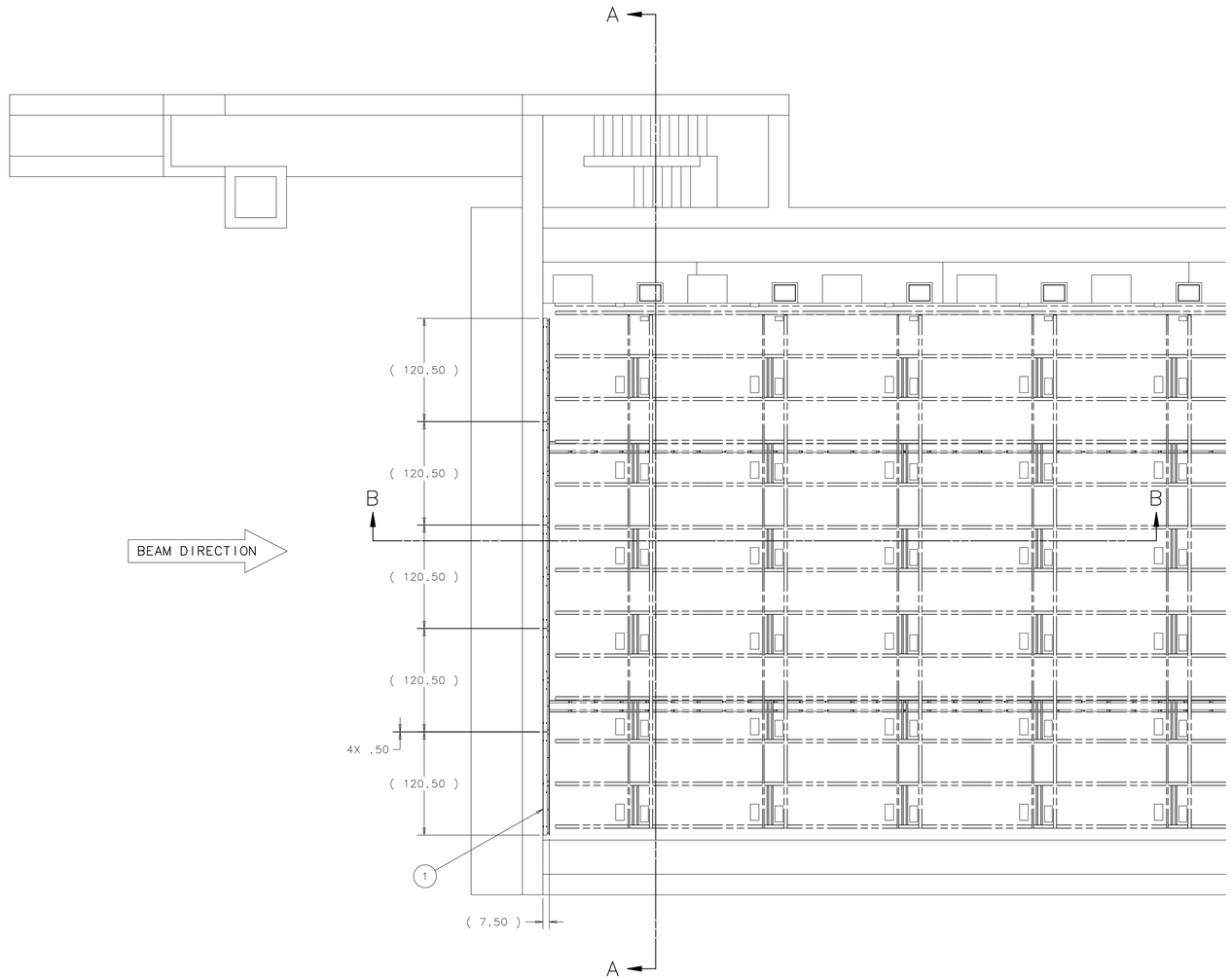

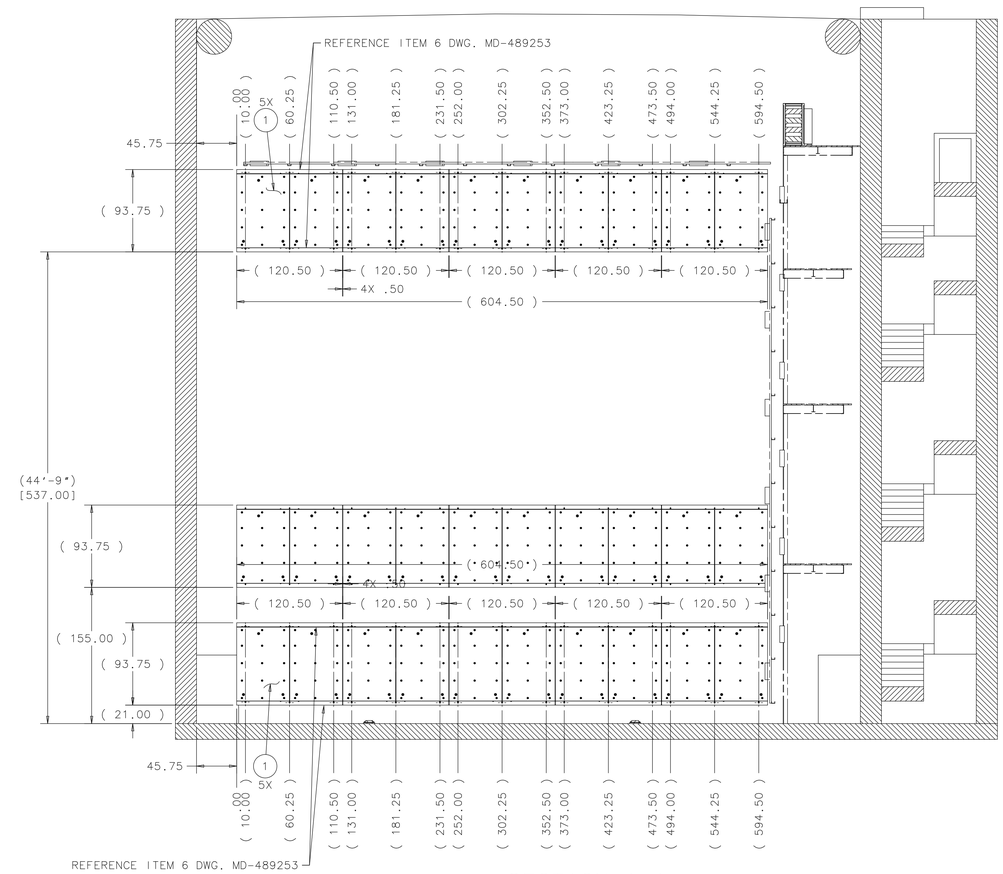

SECTION A-A

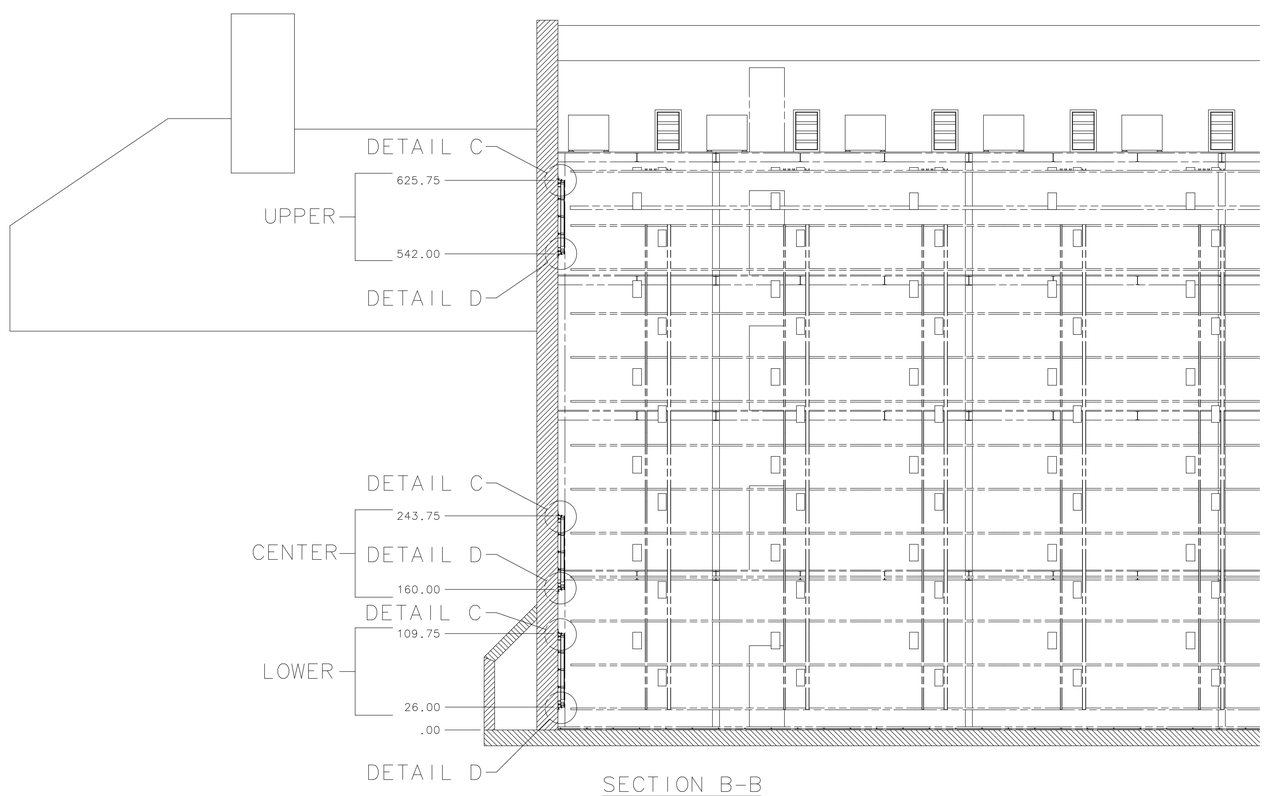

SECTION B-B

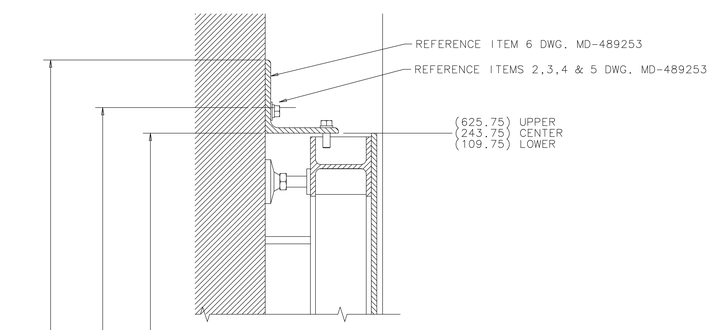

DETAIL C

SCALE: 1:4

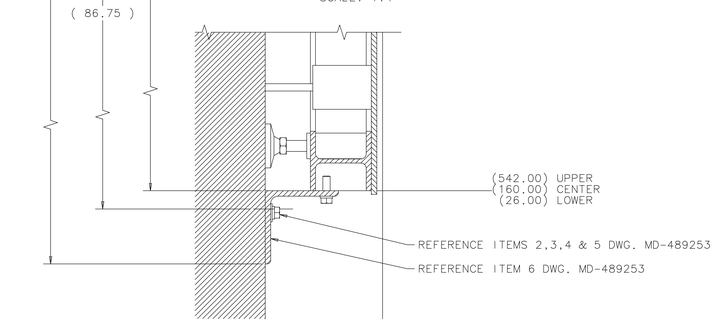

DETAIL D

SCALE: 1:4

ITEM	PART NO.	DESCRIPTION OR SIZE	QTY.
1	MD-489253	BOOKEND SUPPORT ASSY.	15

PARTS LIST

UNLESS OTHERWISE SPECIFIED			ORIGINATOR	E.VILLEGAS	04-AUG-2011
.XX	.XXX	ANGLES	DRAWN	V.MAJDANSKI	04-AUG-2011
± .125	± .015	± - -	CHECKED	J.RAUCH	02-SEP-2011
			APPROVED	E.VILLEGAS	02-SEP-2011

1. BREAK ALL SHARP EDGES .015 MAX.
2. DO NOT SCALE DRAWING.
3. DIMENSIONS BASED UPON ASME Y14.5M 1994
4. MAX. ALL MACH. SURFACES 250
5. DRAWING UNITS: INCHES

USED ON: ME-489315

MATERIAL: SEE PARTS LIST ABOVE

FERMI NATIONAL ACCELERATOR LABORATORY
UNITED STATES DEPARTMENT OF ENERGY

NOVA-FAR_DETECTOR
SOUTH WALL FLATNESS
FD SOUTH WALL FLATNESS SYSTEM

SCALE	DRAWING NUMBER	SHEET	REV
3/16"=1' & AS NOTED	3929.330-ME-489278	1 OF 1	

CREATED WITH : Ideas12NXSeries GROUP: PPD/MECHANICAL DEPARTMENT