REV	DESCRIPTION	DRAWN	DATE
		APPROVED	DATE
A	UPDATED DRAWING FROM REVISIONS TO ITEM 1.	VIC MAJDANSKI	30AUG2011
		J.RAUCH	01SEP2011

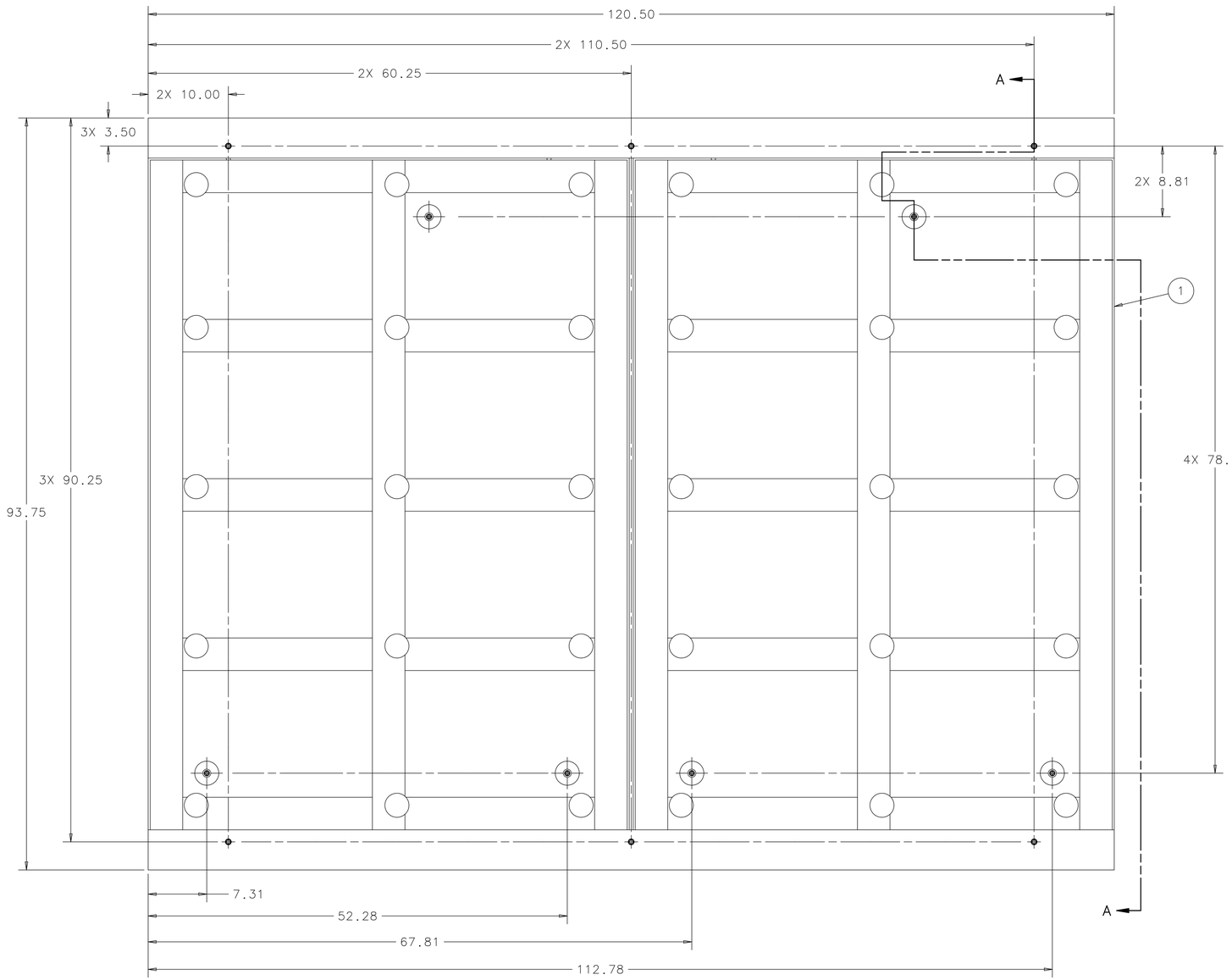

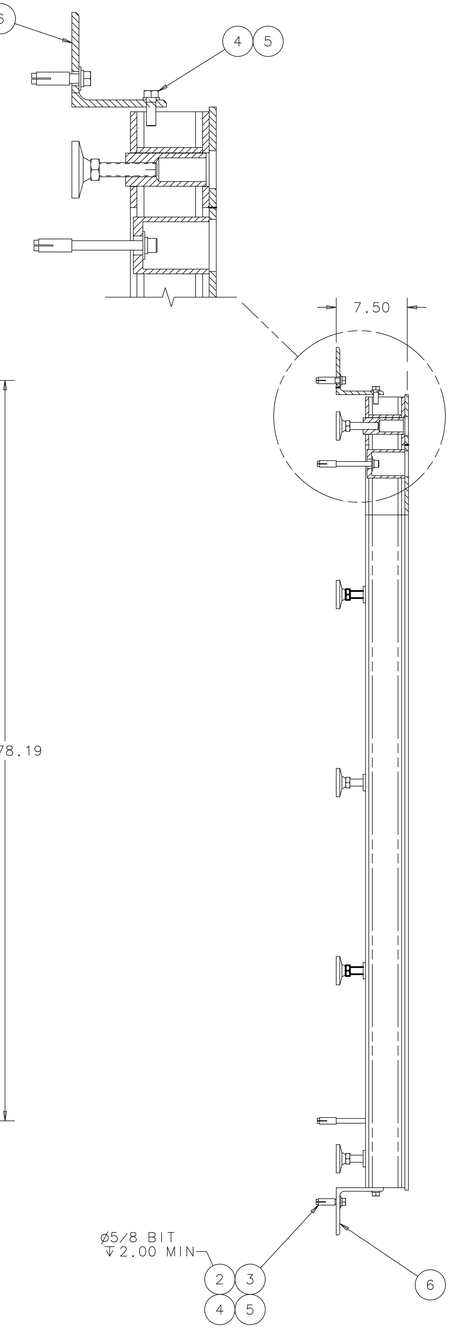

SECTION A–A

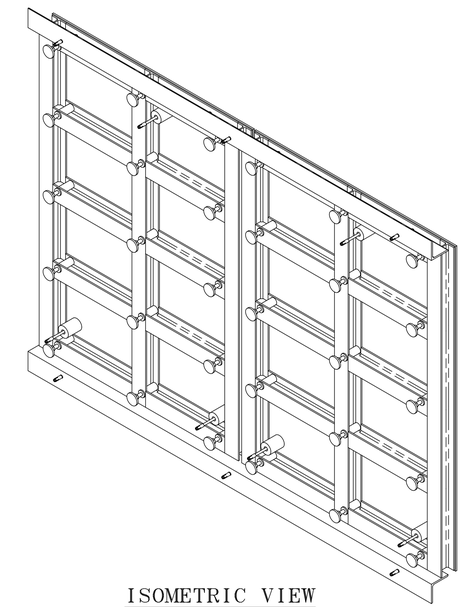

ISOMETRIC VIEW
SCALE: 1:16

EST WT = 1877 LBS

ITEM	PART NO.	DESCRIPTION OR SIZE	QTY.
6	MC-489258	ANGLE, 5 X 5 X 3/8 X 120.50 LG	2
5	COML	SCREW, SOC. HD.; 1/2-13 UNC X 1.50 LG STEEL	14
4	COML	WASHER, LOCK; 1/2 HOLE, STEEL	14
3	COML	WASHER, FLAT; 1/2 HOLE, STEEL	6
2	COML	ANCHOR, DROP-IN; 1/2-13 UNC HILTI #00336427 OR EQUIV.	6
1	MD-489261	BOOKEND PANEL	2

PARTS LIST

UNLESS OTHERWISE SPECIFIED			ORIGINATOR	E.VILLEGAS	26-JUL-2011
.XX	.XXX	ANGLES	DRAWN	V.MAJDANSKI	26-JUL-2011
± .02	± ---	± ---	CHECKED	J.RAUCH	04-AUG-2011
			APPROVED	E.VILLEGAS	04-AUG-2011

1. BREAK ALL SHARP EDGES .03 MAX.
2. DO NOT SCALE DRAWING.
3. DIMENSIONS BASED UPON ASME Y14.5M-1994
4. MAX. ALL MACH. SURFACES 250
5. DRAWING UNITS: U.S. INCH

USED ON: ME-489278

MATERIAL: SEE PARTS LIST ABOVE

FERMI NATIONAL ACCELERATOR LABORATORY
UNITED STATES DEPARTMENT OF ENERGY

NOVA-FAR_DETECTOR SOUTH WALL FLATNESS BOOKEND SUPPORT ASSY

SCALE	DRAWING NUMBER	SHEET	REV
1:8 & AS NOTED	3929.330-MD-489253	1 OF 1	A

CREATED WITH : Ideas12NXSeries | GROUP: PPD/MECHANICAL DEPARTMENT