(Short) Discussion of ICARUS FEE System and the LAr Prototype Detector

Gerard Visser

IUCF

gvisser@iucf.indiana.edu

4/23/2004

ICARUS FEE System (576 channels shown)

Digital (filter, zero-suppression, buffer, DAQ network)

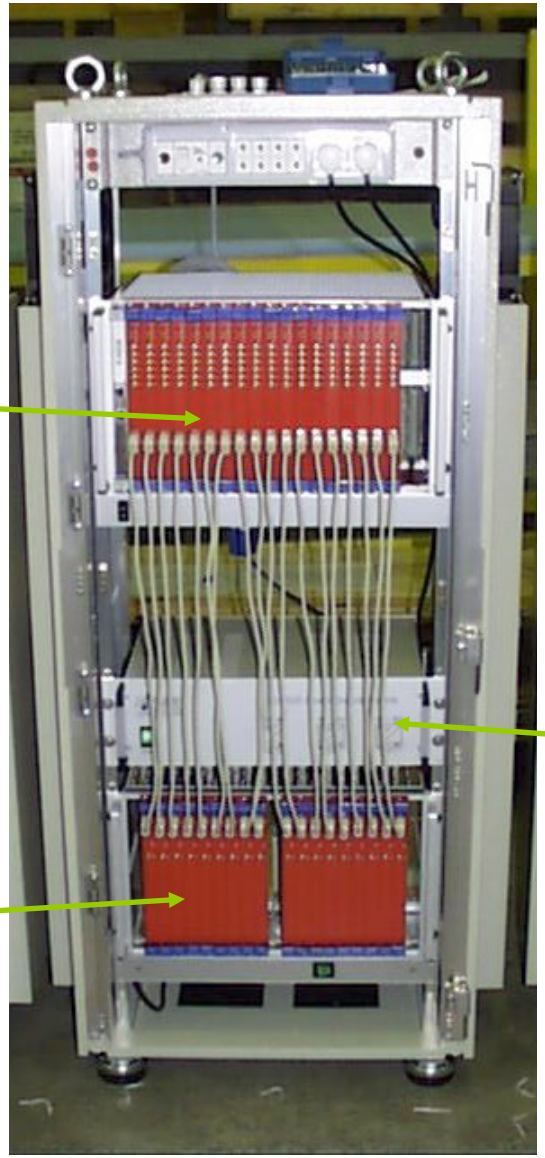

PS for analog

Analog (integrate/shape, 2.5MSPS digitize)

ICARUS FEE 32-Channel Analog Board “V791” (6U but it’s not a VME Board)

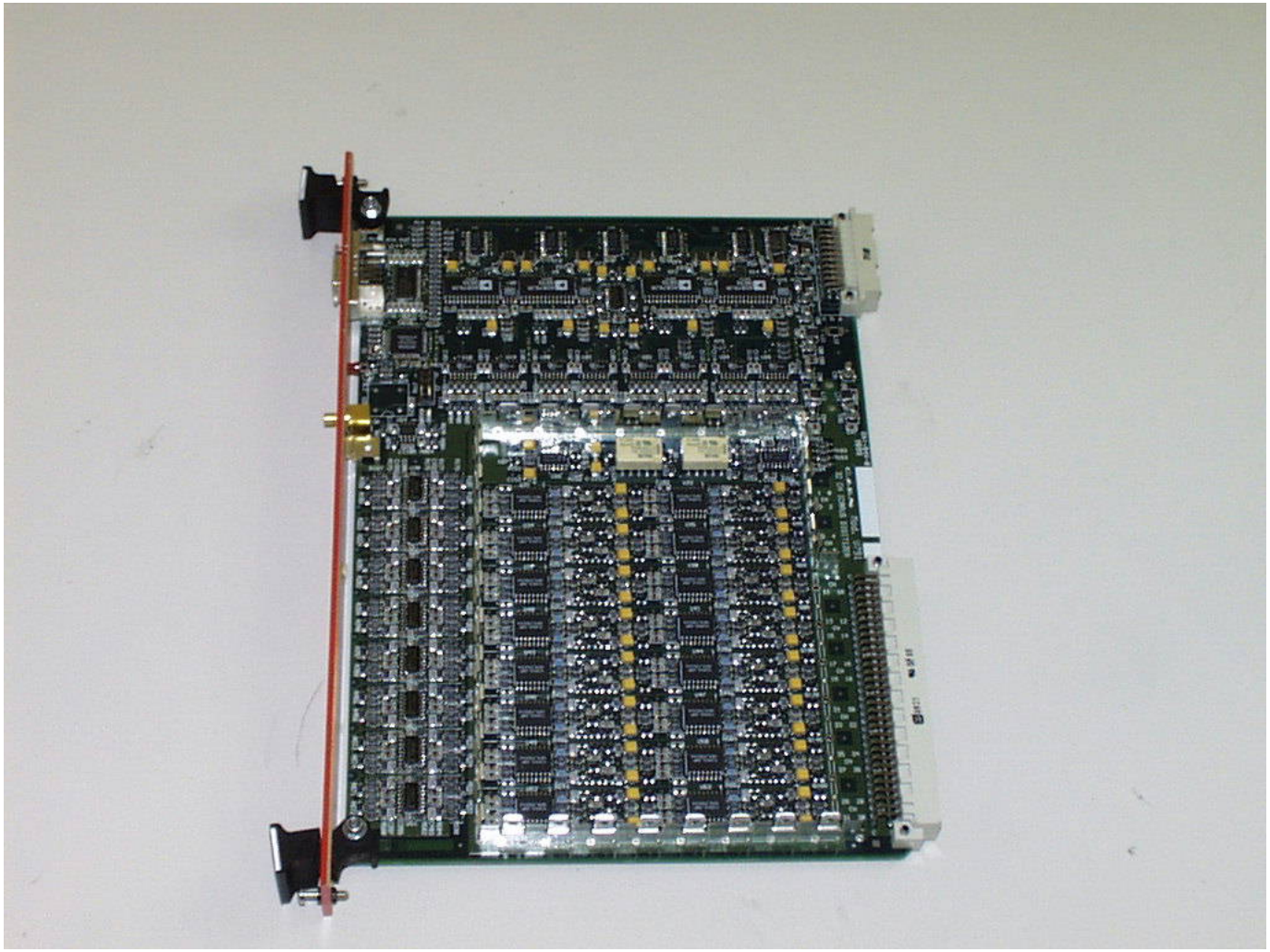

ICARUS FEE 32-Channel “De”Coupling Board “A764”

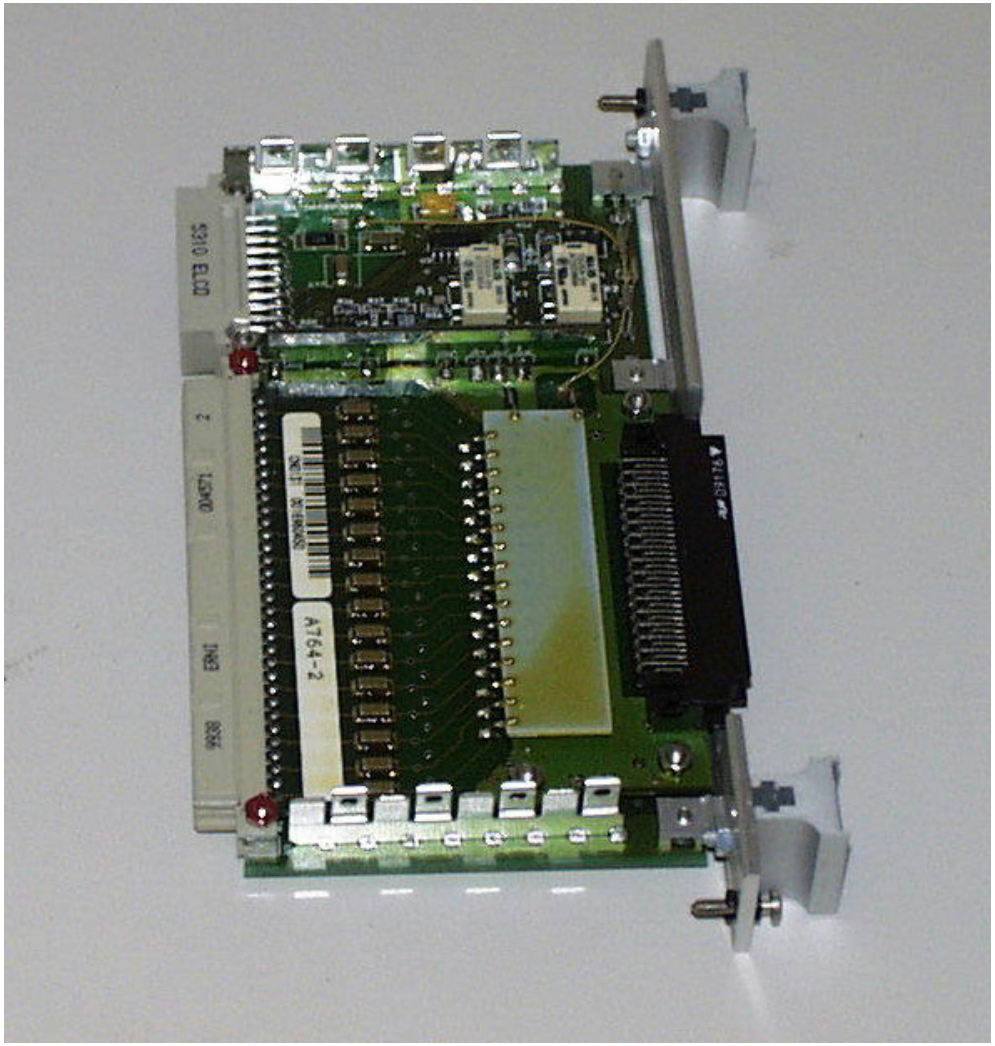

ICARUS FEE 32-Channel Digital Board “V789” (VME)

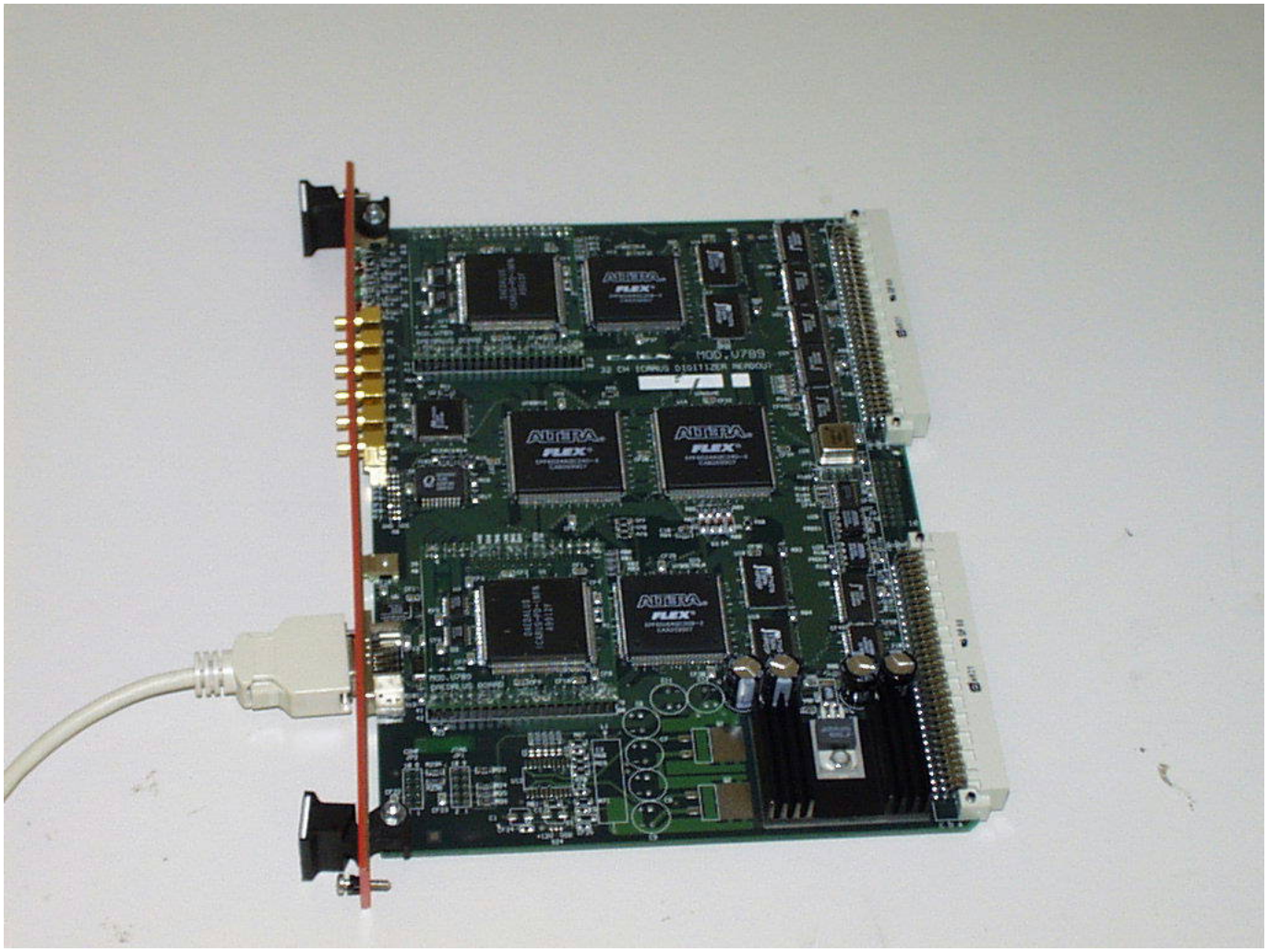

ICARUS FEE Concept

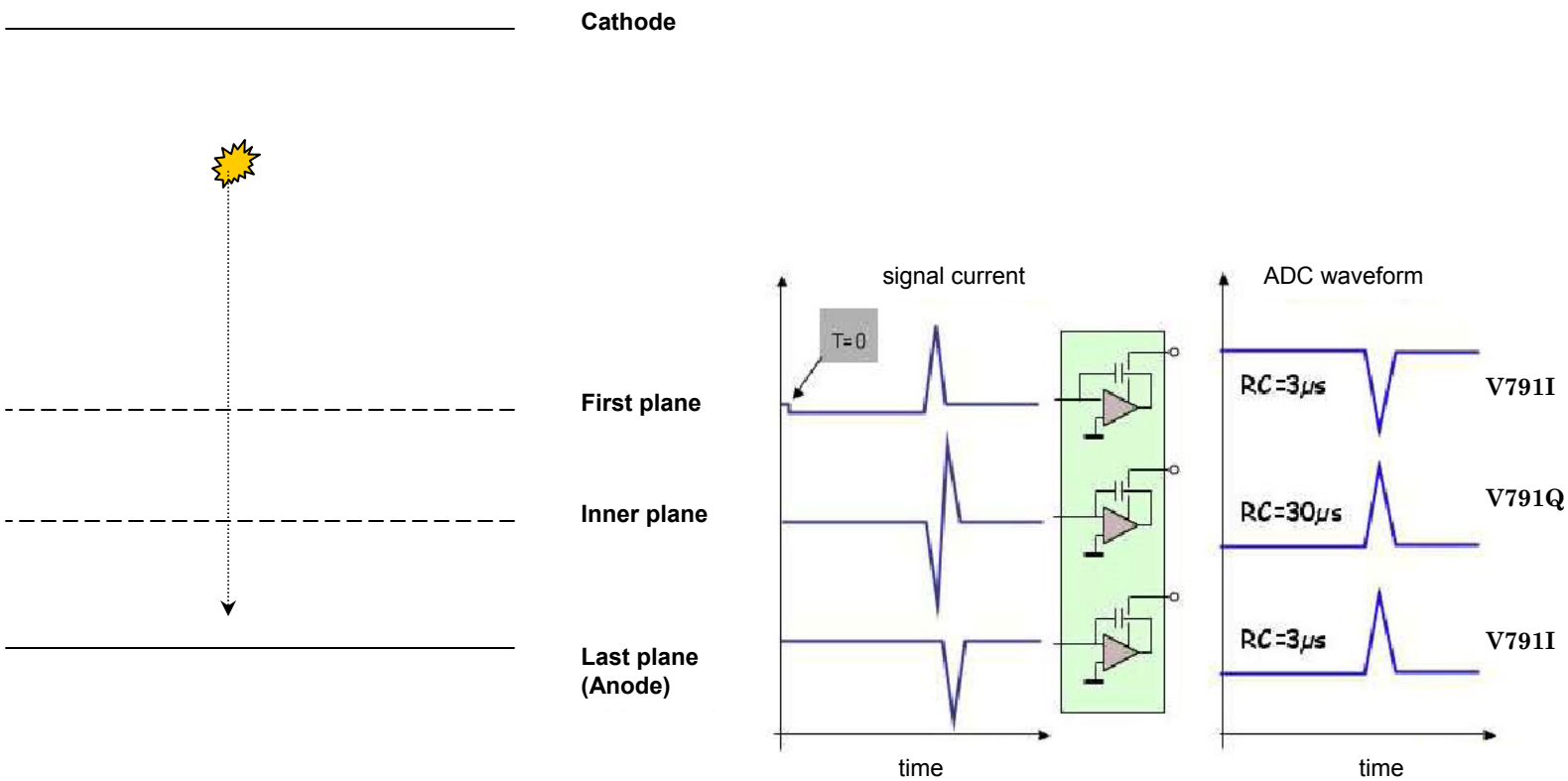

Fig. 49. Sketch of the signal shapes from the three ICARUS read–out planes.

Note: Any number of “mid” planes can be added, or there could be none. Depends how many wire angles are needed to resolve ambiguities...

ICARUS FEE – Charge Amplifier Waveforms

But note: In reality they use current amplifier on 1st & last plane, as shown above!

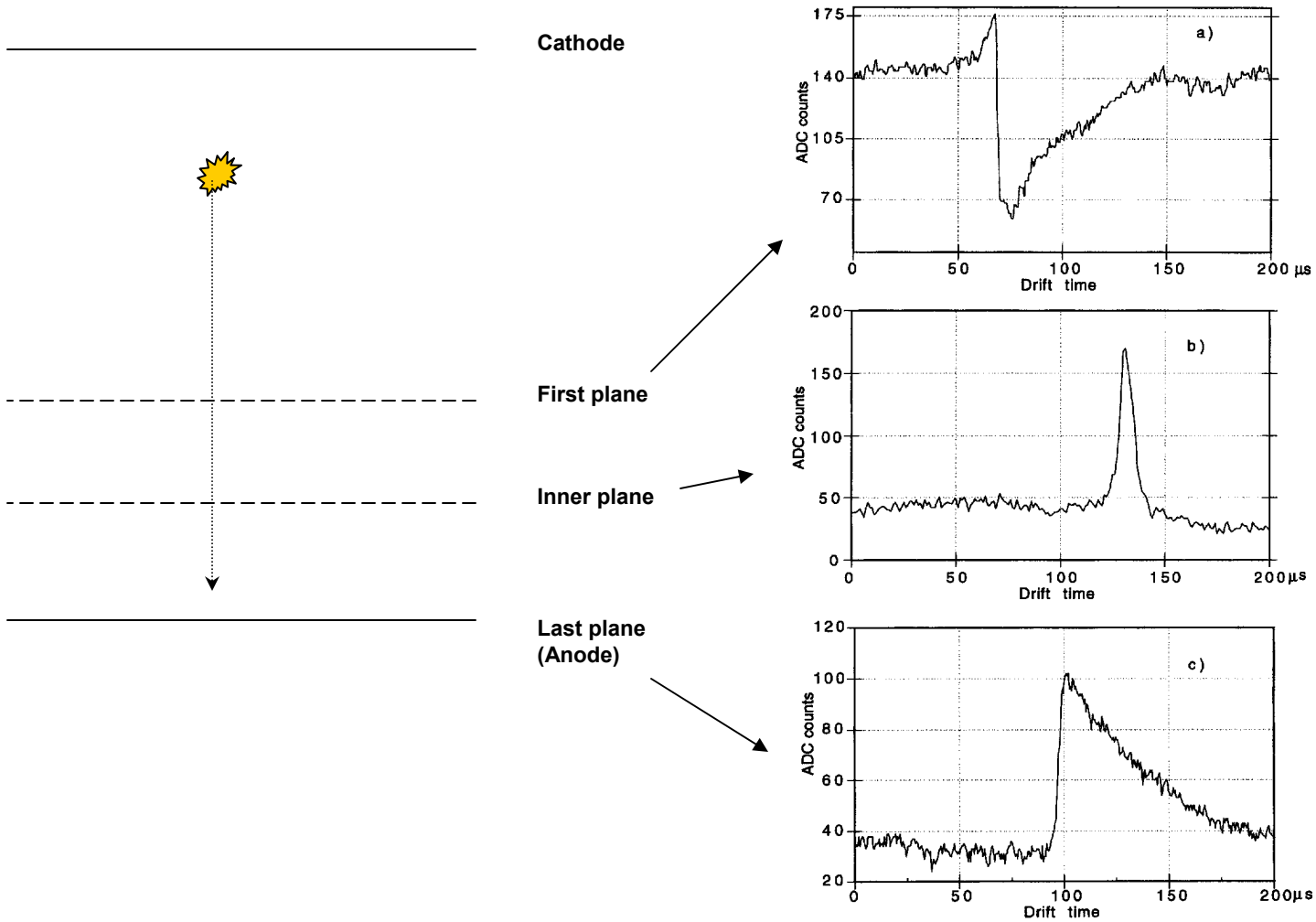

Fig. 1. (a) First induction signal (no grid in front), (b) second induction signal, (c) collection signal.

ICARUS FEE Block Diagrams

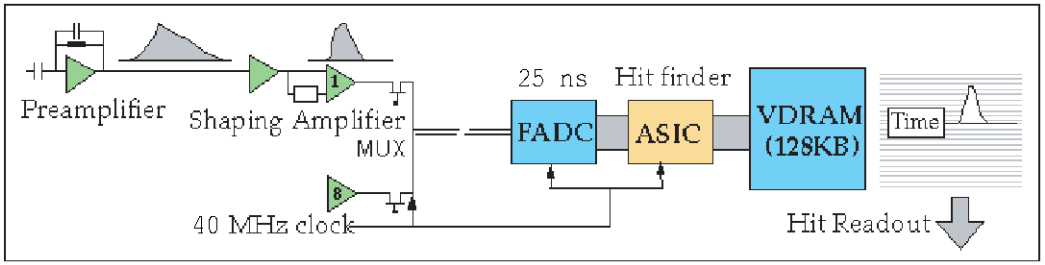

Fig. 44. Single wire readout scheme.

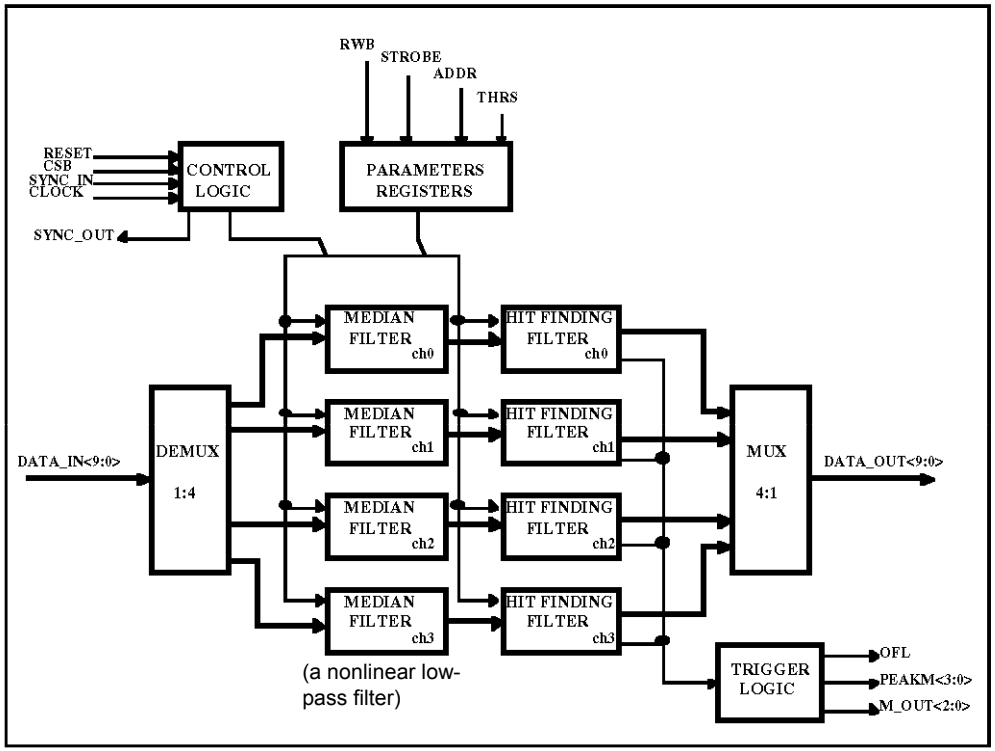

Fig. 45. Block diagram of the hit finder chip.

V791 Input Amplifier / Shaper Schematic

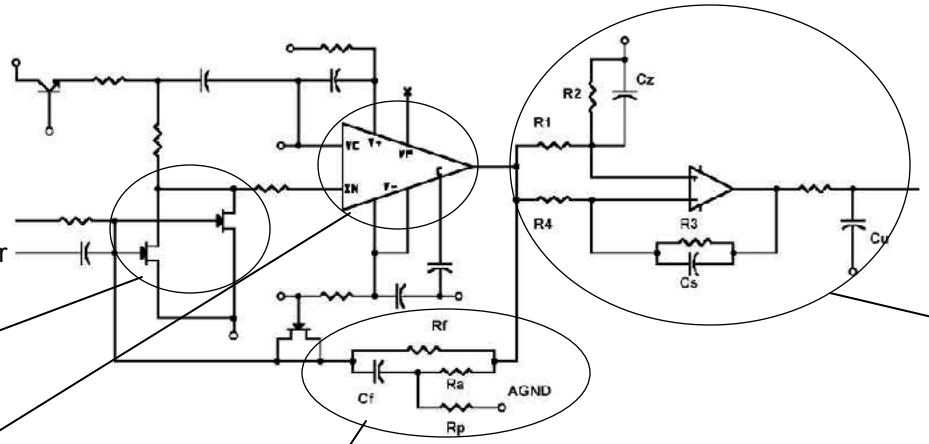

Fig. 48. Schematic layout of the front–end amplifier mounted on the CAEN–V791 analog boards.

Required Items for LAr prototype readout (3 planes, <32 ch. each)

- 3 CAEN V791 boards (preferably, 1 V791Q, 2 V791C).
- 1 ICARUS-style analog crate for V791 boards. (*We could make do* with a 6U card cage without any backplane, plus some mating connectors soldered together with wires. There are no sensitive signals on the analog crate backplane, except for the clock, which is differential and can be dealt with. The input signals just go through the backplane, and all we need is to buy the connectors that would be used on the backplane. The preferred solution, however, is to borrow an ICARUS analog crate.)
- Low-noise power supplies 3× 5.0V @ 5A, 5A, 2A – use HP or similar benchtop supplies.
- 3 ICARUS “A764” “de”coupling boards for V791 input signals. (We could easily make something, but given the number of channels it will require a board layout, which is some $).
- Plane bias power supplies (low noise) for 2/3 planes (either -220V, +280V, or -500V, -280V).
- 3 CAEN V789 boards and a VME crate and CPU, ***or*** an alternate method of data acquisition and readout.

Optional items

- ICARUS “HV Filter” module for analog crate. (We can easily cook up an alternative, if it is needed at all. (There is some filtering on the A764 too, or at least there should be.))
- 1 CAEN V793 board (drives the global clock on analog crate). (We don’t need this module in particular, can easily cook up an alternative. But might as well use V793.)

Open Issues

- I prefer a system design which has no voltage difference within a signal cable or on the wire plane PC boards. In other words, each wire plane has a local “GND” which are all AC coupled together but carry the DC bias voltage of the particular plane. The wire plane structure is then more easily an equipotential surface (this may be useful since the area of the planes here is small), and also more importantly we are not subject to noise from cable leakage currents or capacitance fluctuations (for instance from vibration). ICARUS does it differently – the signal cables carry GND DC coupled, and signal wires at the plane bias voltage. I’d need to see the actual A764 boards to know if they can be modified to AC couple the grounds, or whether we must stick to ICARUS’s plan. In any case I suggest the wire plane design assumes that “GND” may be at voltage – do not bond directly to the support structure.
- Cable P/N given in the papers (KFTC-HP-30AWG-P270A) is not(?) a standard 3M number. I’ll try to track it down. Looks like it must be polyolefin insulation, similar to 3M #2049/68. Is it twist-n-flat, really? Not sure what is the motivation there. Can we get a data sheet from our ICARUS contacts? Where can we get the cable?
- Probably we should use 3 CAEN V789’s for the data acquistion, probably it is the easiest. On the other hand, a logic analyzer with 68 channels, 64k memory depth, and >40 MHz state analyzer capability, and an ethernet interface, would work just fine too. But a means of connecting it to the V791 output cable would have to be cobbled together. Using the V789’s would allow (maybe) to use ICARUS DAQ software instead of writing something new.