REV	DESCRIPTION	DATE

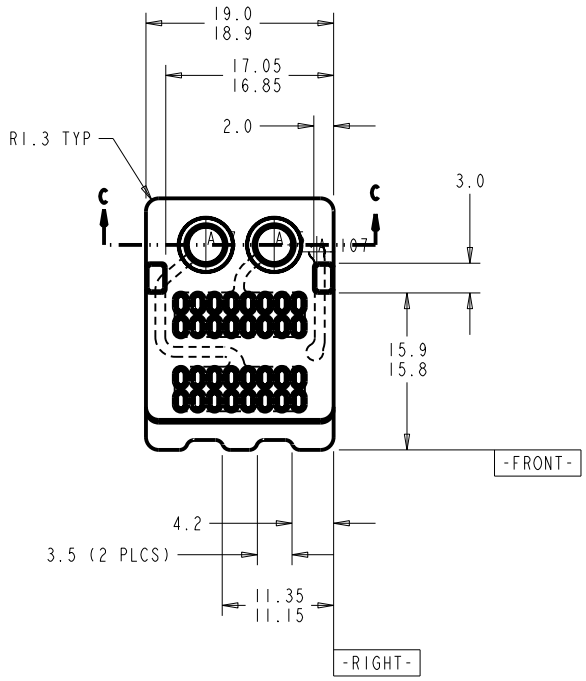

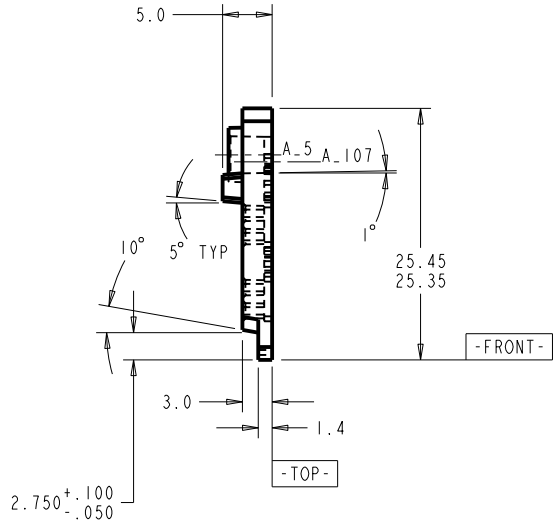

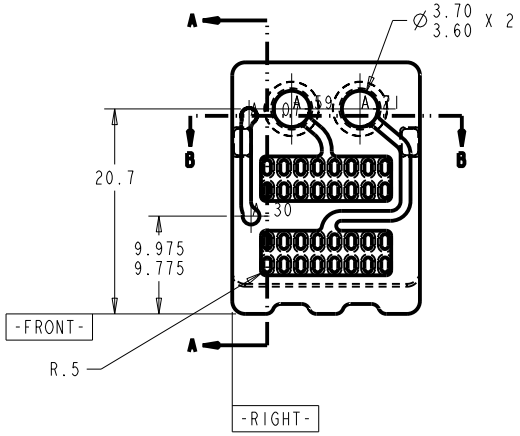

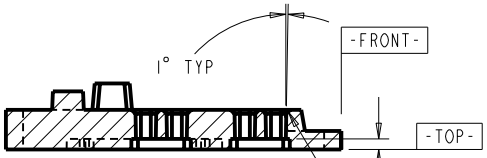

SECTION A-A
SCALE 4.000

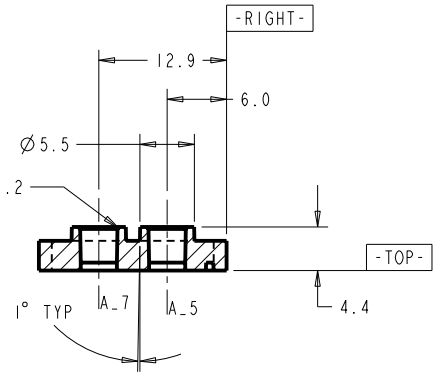

SECTION C-C

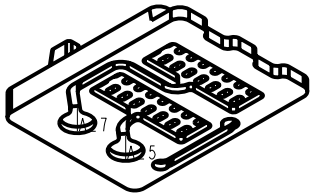

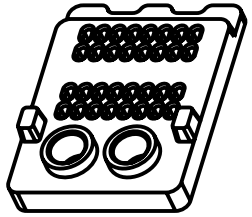

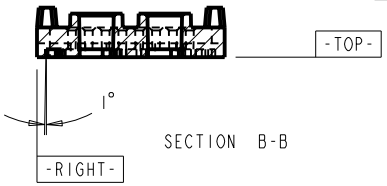

SECTION B-B

NOTES	
1	MATERIAL: GRAY NORYL, GRADE PX9406-780, OR EQUIVALENT
2	DO NOT USE MOLD RELEASE
3	NO MEASURABLE WARPAGE
4	MATERIAL REGRIND NOT TO EXCEED SUPPLIER RECOMMENDATIONS
2	QUANTITY: 12,500 (14 KT DETECTOR)

TOLERANCES		ORIGINATOR	T. Chase	13-Nov-06
.X	±0.1	DRAWN BY	T. Chase	13-Nov-06
.XX	±0.01	CHECKED		
.XXX	±0.001	APPROVED		
ANGLES	±0.5	USED ON: Module Manifold		

NOvA Experiment (Fermilab E929)

UNIVERSITY OF MINNESOTA

Optical Connector, Back

Finish	Model Type: PART	Model File Name: OPT_CONN_BACK_7	Drawing File Name: OPT_CONN_BACK_7
	Scale 3.000:1	Drawing Number	Revision / Sheet 1 of 2
	All dimensions are in mm unless specified otherwise		