REV	DESCRIPTION	DATE

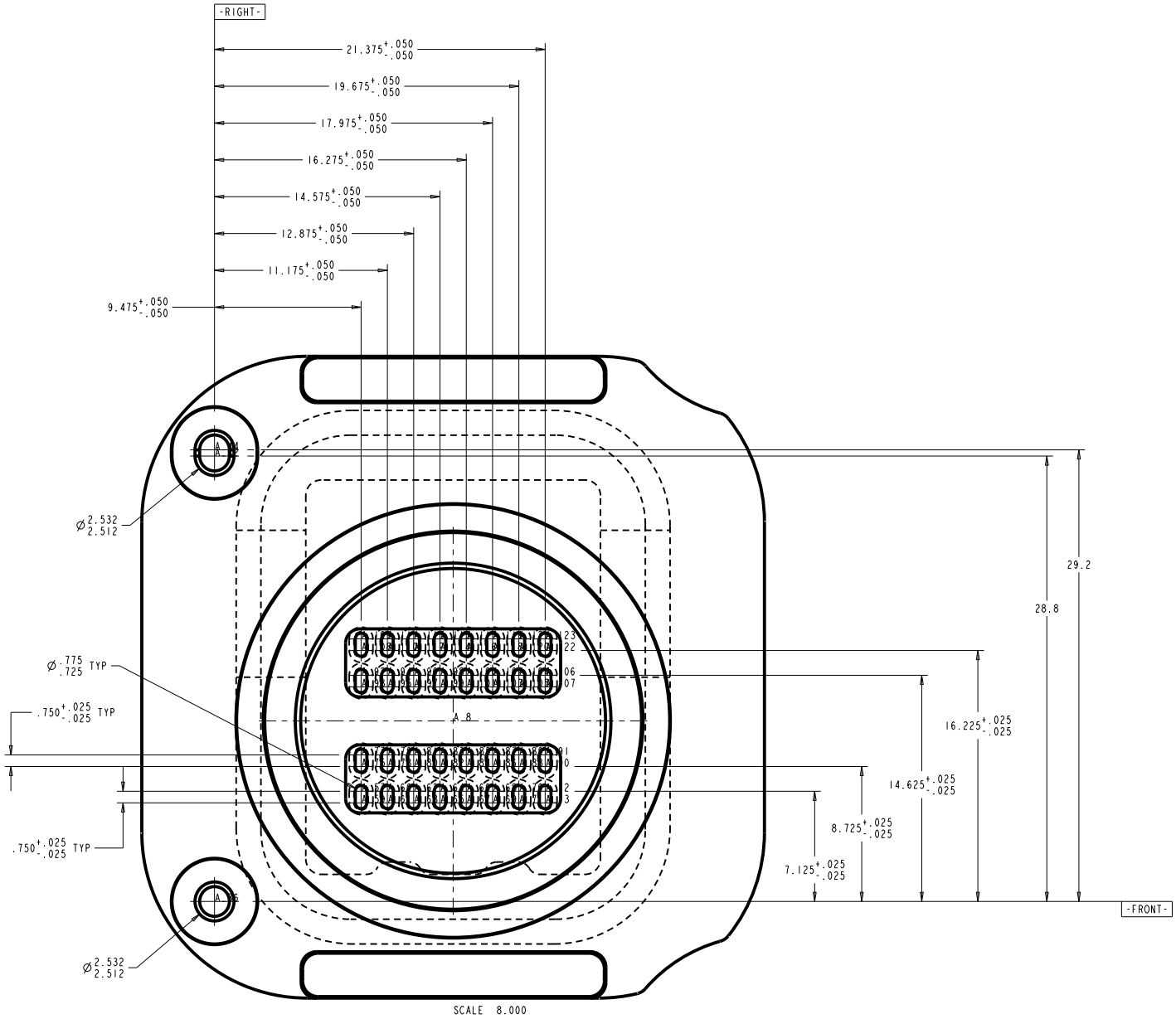

TOLERANCES		ORIGINATOR	T. Chase	12-Jun-07
.X	±0.1	DRAWN BY	T. Chase	12-Jun-07
.XX	±0.01	CHECKED		
.XXX	±0.001	APPROVED		
ANGLES	±0.5	USED ON: NOvA manifolds		

NOvA Experiment (Fermilab E929)

University of Minnesota

Optical Connector

Model Type: PART	Model File Name: OPT_CONN_7	Drawing File Name: OPT_CONN_7
Scale 3.000:1	Drawing Number	Revision / Sheet 3 of 3
Finish	All dimensions are in mm unless specified otherwise	