REV	DESCRIPTION	DRAWN	DATE
		APPROVED	DATE

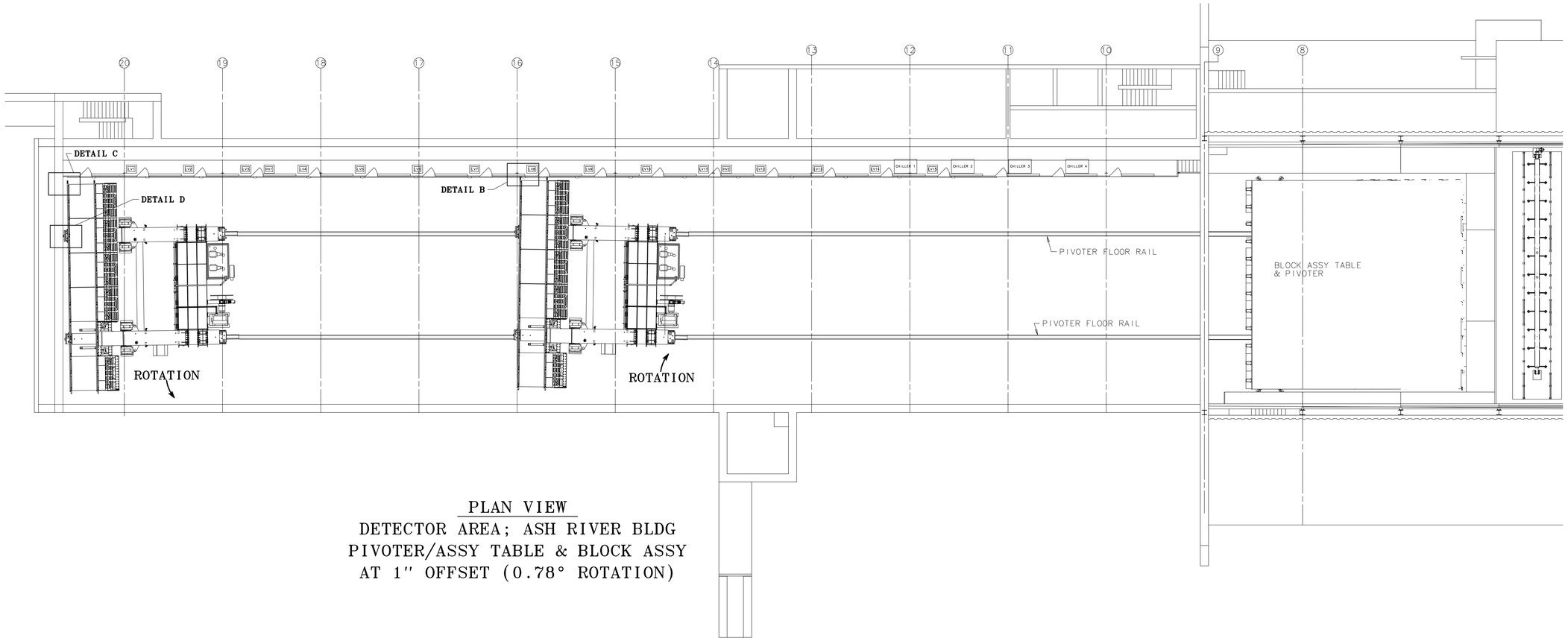

PLAN VIEW
DETECTOR AREA; ASH RIVER BLDG
PIVOTER/ASSY TABLE & BLOCK ASSY
AT 1" OFFSET (0.78° ROTATION)

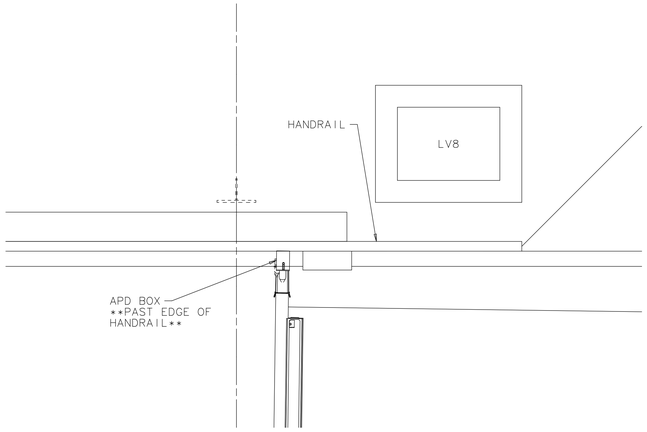

DETAIL B
SCALE: 1"=1'-0"

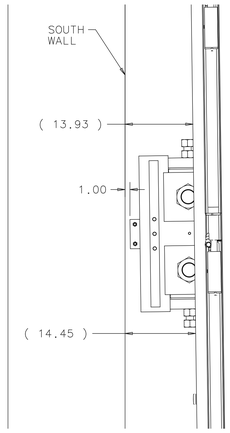

DETAIL D
SCALE: 1"=1'-0"

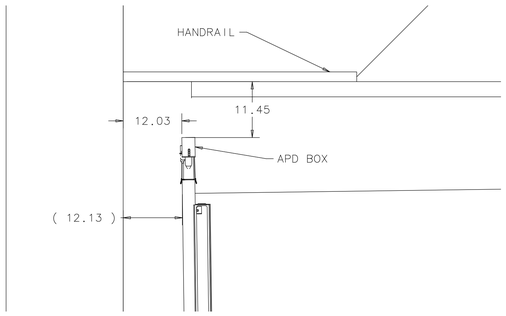

DETAIL C
SCALE: 1"=1'-0"

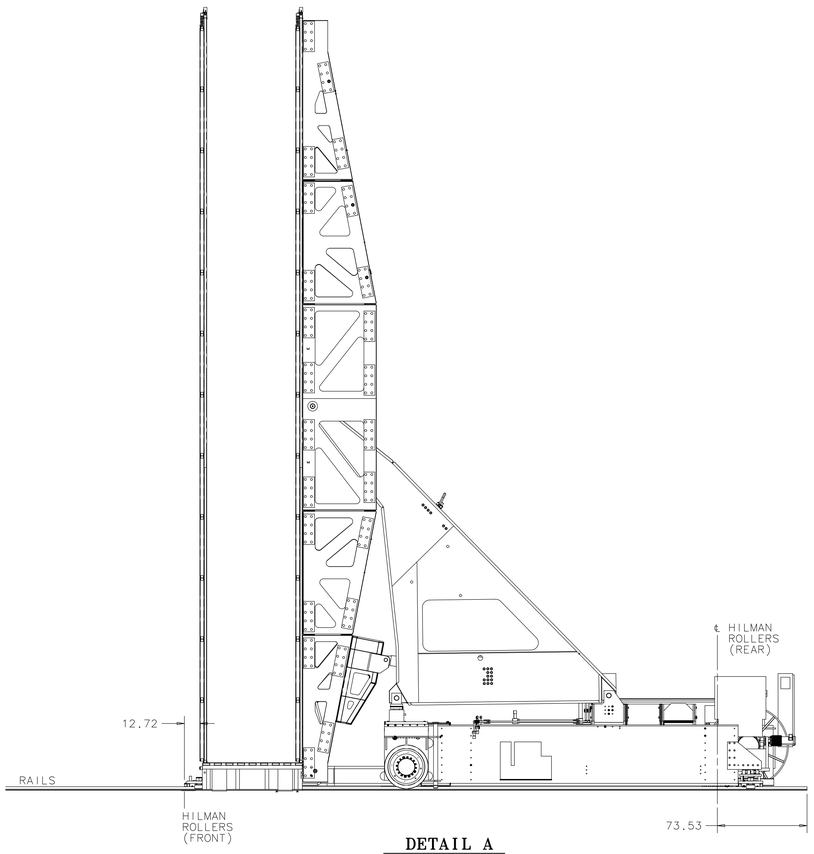

DETAIL A
SIDE VIEW PARALLEL
TO RAILS
SCALE: 1/4"=1'

NOTES:

1. MIDDLE PLANES OF BLOCKS ARE NOT SHOWN FOR CLARITY.

UNLESS OTHERWISE SPECIFIED			ORIGINATOR	P.LUKENS	06-JUL-2011
.XX	.XXX	ANGLES	DRAWN	D.FRIEND	06-JUL-2011
± --	± ---	± ---	CHECKED		
1. BREAK ALL SHARP EDGES MAX.			APPROVED		
2. DO NOT SCALE DRAWING. 3. DIMENSIONS BASED UPON ASME Y14.5M-1994. 4. MAX. ALL MACH. SURFACES			USED ON		
5. DRAWING UNITS: U.S. INCH			MATERIAL		

FERMI NATIONAL ACCELERATOR LABORATORY
UNITED STATES DEPARTMENT OF ENERGY

NOVA-FAR_DETECTOR
INSTALLATION & ENGINEERING SPECS
BLOCK & PIVOTER TRAVEL ROTATION

SCALE	DRAWING NUMBER	SHEET	REV
3/32"=1' & NOTED	3929.330-ME-489227	1 OF 1	

CREATED WITH : Ideas12NXSeries GROUP: PPD/MECHANICAL DEPARTMENT