REV	DESCRIPTION	DRAWN	DATE
		APPROVED	DATE

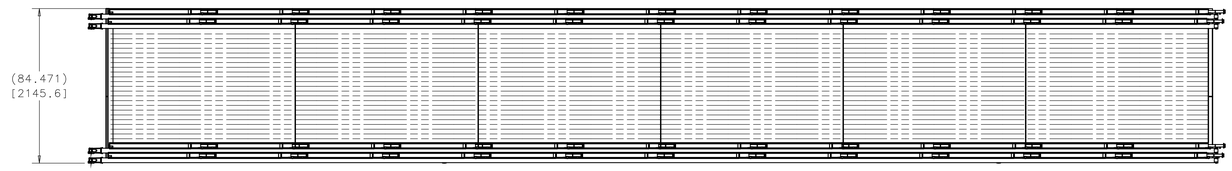

NOTE: MIDDLE PLANES NOT SHOWN FOR CLARITY

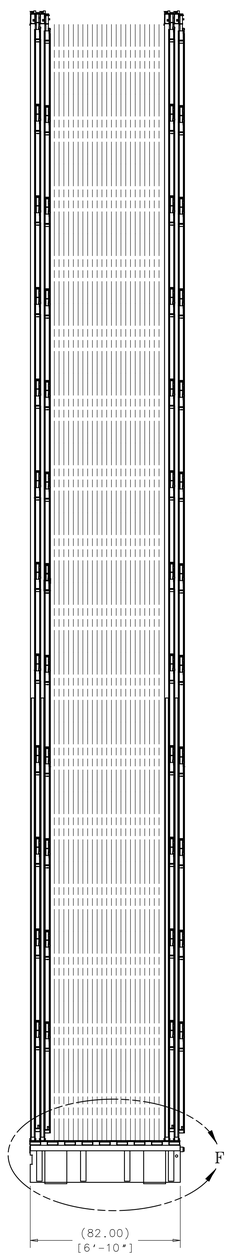

NOTE: MIDDLE PLANES NOT SHOWN FOR CLARITY

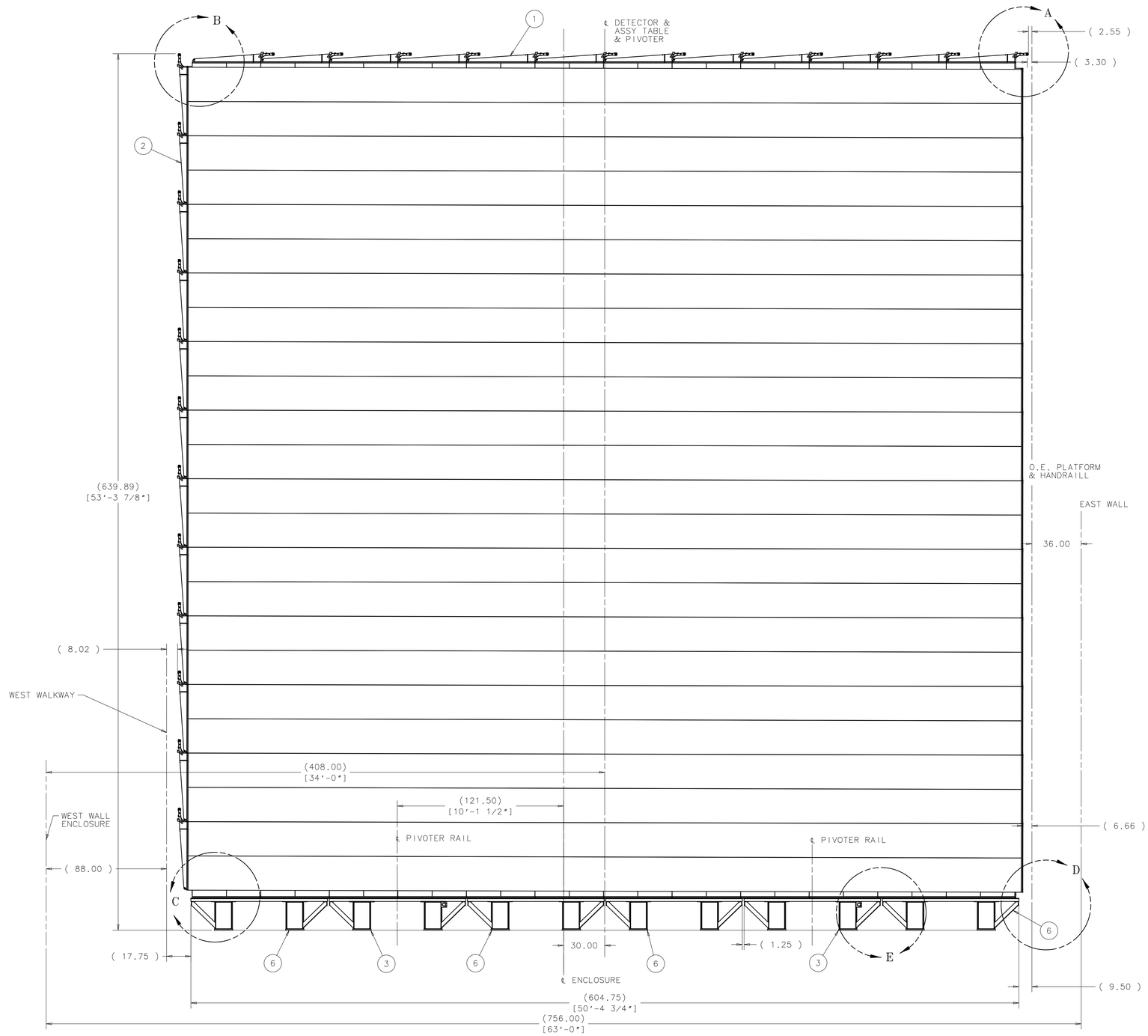

EST. WT. = 393,643 LBS.

ITEM	PART NO.	DESCRIPTION OR SIZE	QTY.
6	MD-486833	AR PALLET SEGMENT	4
5	REF	FLEXANE 80 PUTTY	---
4	REF	SHEET METAL SKIN	---
3	MD-486995	AR PALLET-PIVOT SEGMENT	2
2	ME-489020	12 MODULE HORIZONTAL PLANE	16
1	ME-489024	12 MODULE VERTICLE PLANE	16

PARTS LIST

UNLESS OTHERWISE SPECIFIED			ORIGINATOR	P.LUKENS	24-JUN-2011
.XX	.XXX	ANGLES	DRAWN	D.FRIEND	24-JUN-2011
± .12	± ---	± ---	CHECKED		
			APPROVED		

1. BREAK ALL SHARP EDGES MAX.
2. DO NOT SCALE DRAWING.
3. DIMENSIONS BASED UPON ASME Y14.5M-1994
4. MAX. ALL MACH. SURFACES
5. DRAWING UNITS: U.S.INCH

USED ON

MATERIAL: SEE PARTS LIST ABOVE

FERMI NATIONAL ACCELERATOR LABORATORY
UNITED STATES DEPARTMENT OF ENERGY

NOVA-DETECTOR PROTOTYPE FAR DETECTOR 32 PLANE BLOCK ASSY - STAGGERED

SCALE	DRAWING NUMBER	SHEET	REV
1:32 & AS NOTED	3929.330-ME-489190	1 OF 2	

CREATED WITH : Ideas12NXSeries GROUP: PPD/MECHANICAL DEPARTMENT

REV	DESCRIPTION	DRAWN	DATE
		APPROVED	DATE

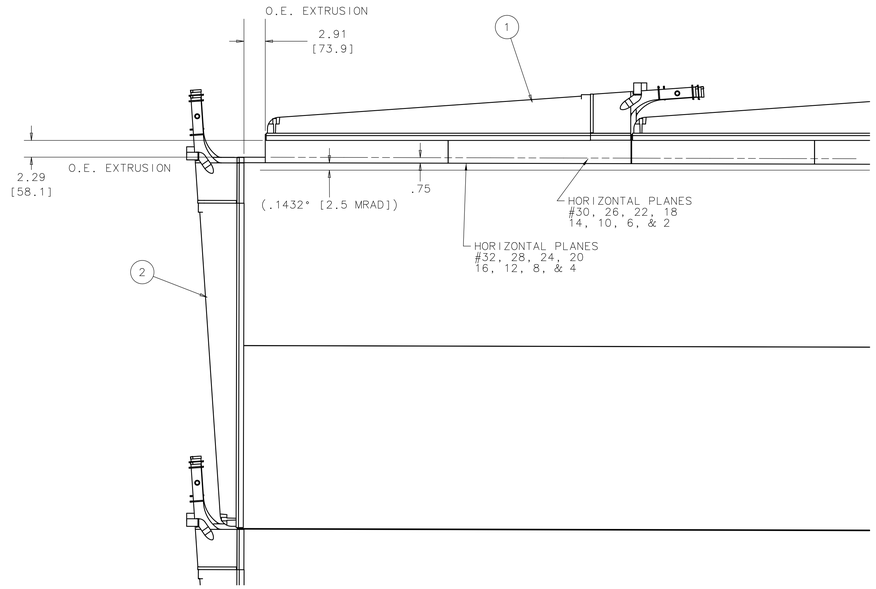

DETAIL B
SCALE: 1:8

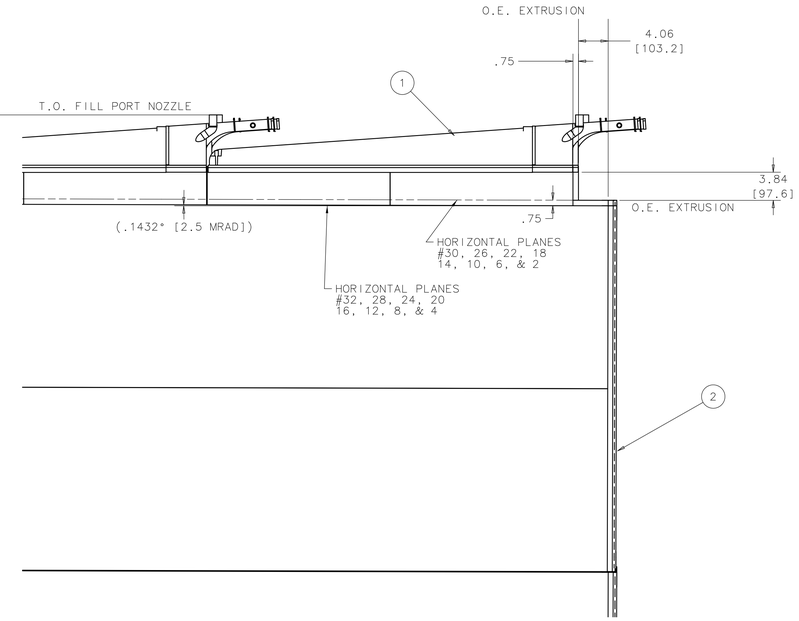

DETAIL A
SCALE: 1:8

640.90
[16279.0]

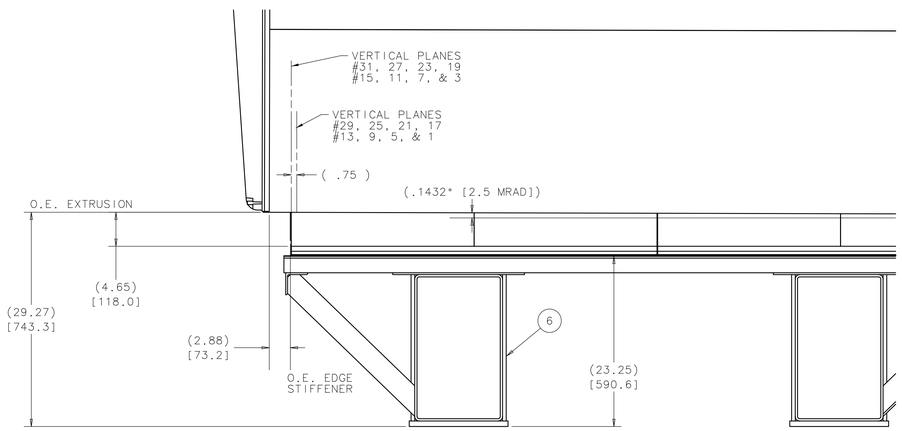

DETAIL C
SCALE: 1:8

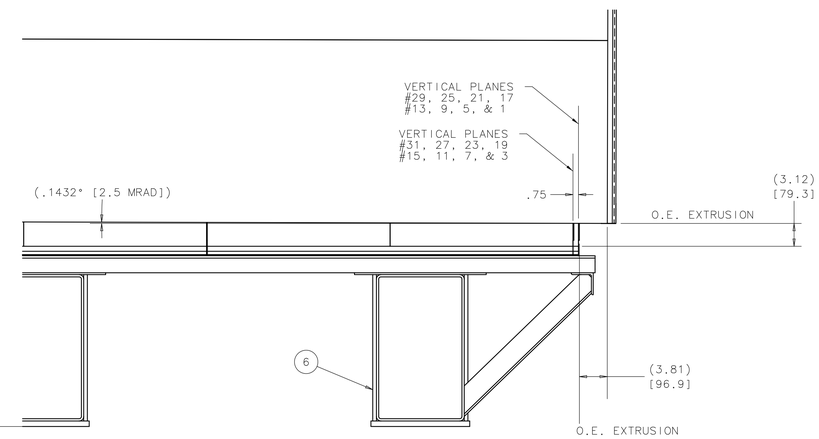

DETAIL D
SCALE: 1:8

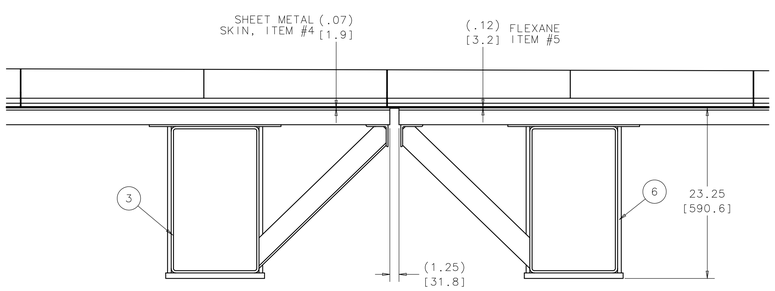

DETAIL E
SCALE: 1:8

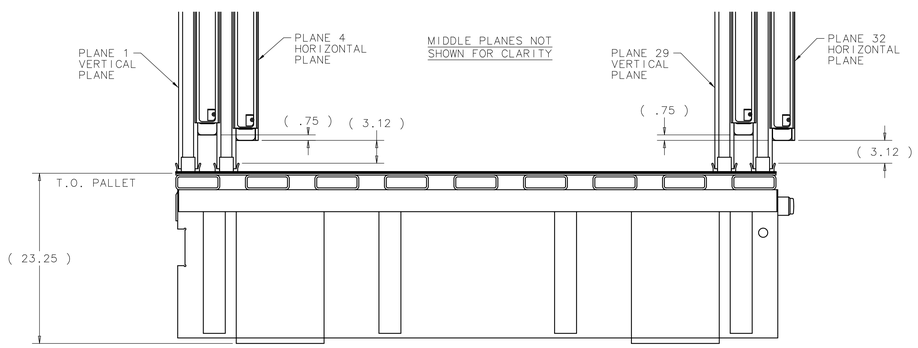

DETAIL F
SCALE: 1:8

UNLESS OTHERWISE SPECIFIED			ORIGINATOR	P.LUKENS	24-JUN-2011
.XX	.XXX	ANGLES	DRAWN	D.FRIEND	24-JUN-2011
± .12	± ---	± ---	CHECKED		
1. BREAK ALL SHARP EDGES MAX.			APPROVED		
2. DO NOT SCALE DRAWING. 3. DIMENSIONS BASED UPON ASME Y14.5M-1994 4. MAX. ALL MACH. SURFACES			USED ON		
5. DRAWING UNITS: U.S. INCH			MATERIAL	SEE PARTS LIST ABOVE	

FERMI NATIONAL ACCELERATOR LABORATORY
UNITED STATES DEPARTMENT OF ENERGY

NOVA-DETECTOR PROTOTYPE
FAR DETECTOR
32 PLANE BLOCK ASSY - STAGGERED

SCALE	DRAWING NUMBER	SHEET	REV
1:32 & AS NOTED	3929.330-ME-489190	2 OF 2	

CREATED WITH : Ideas12NXSeries GROUP: PPD/MECHANICAL DEPARTMENT

Created: 08:20:28 on 24-06-11 (D-M-Y) By: friend State: 1-INITIAL