| REV | DESCRIPTION | DATE |
|---|---|---|
| | | |

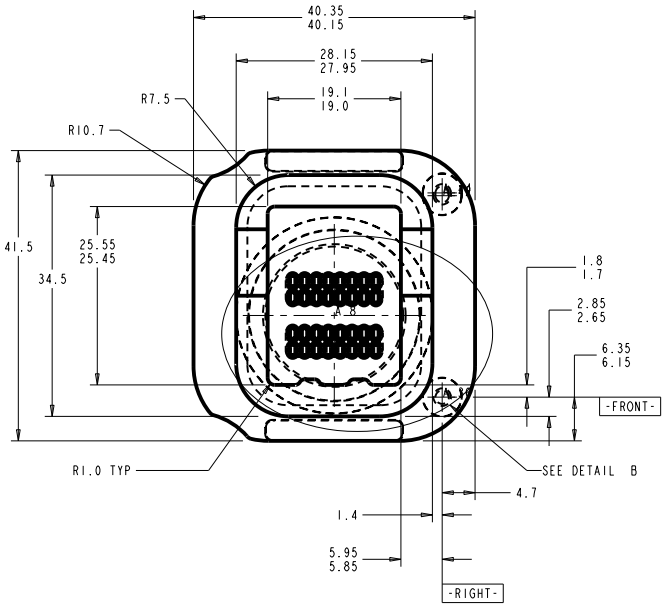


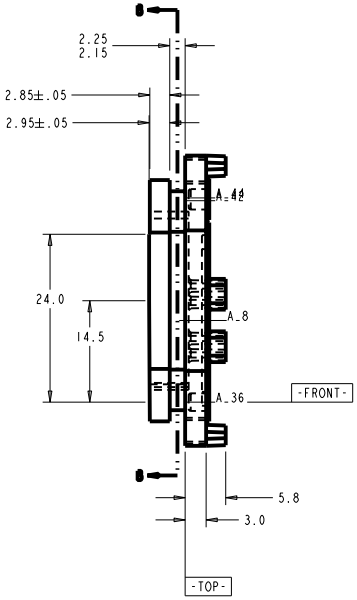


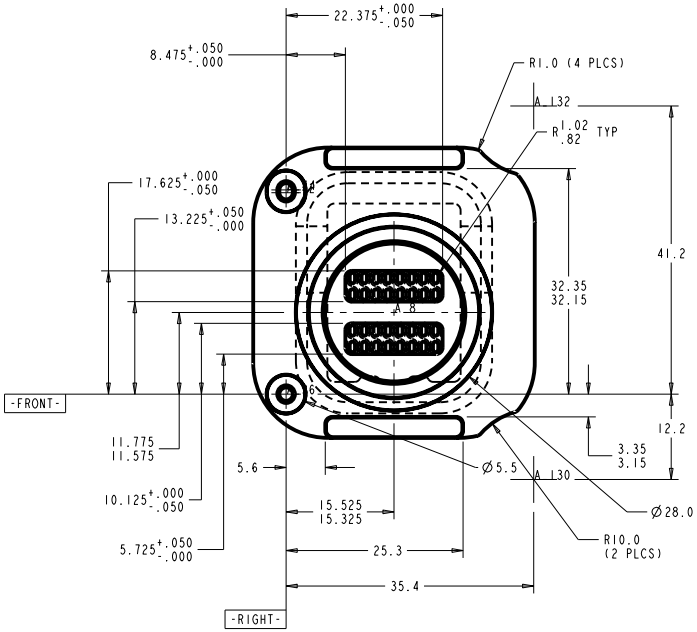


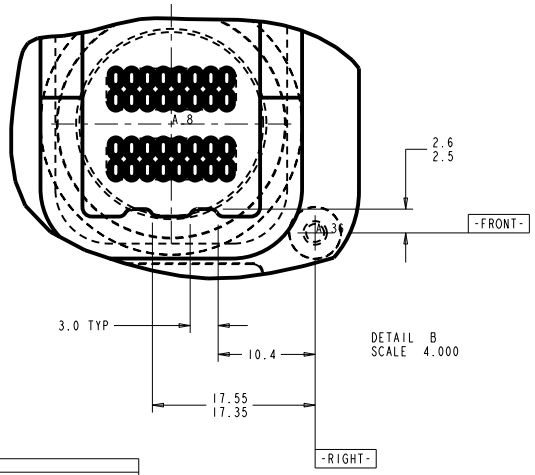


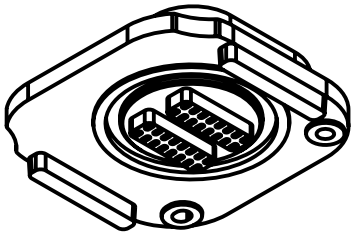

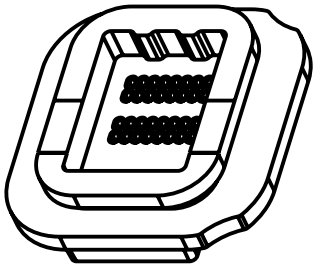

| NOTES | |
|---|---|
| 1 | MATERIAL: GRAY NORYL, GRADE PX9406-780, OR EQUIVALENT |
| 2 | DO NOT USE MOLD RELEASE |
| 3 | NO MEASURABLE WARPAGE |
| 4 | MATERIAL REGRIND NOT TO EXCEED SUPPLIER RECOMMENDATIONS |
| 5 | QUANTITY: 12,500 (14 KT DETECTOR) |

| TOLERANCES | | ORIGINATOR | T. Chase | 10-Nov-06 |
|---|---|---|---|---|
| .X | ±0.1 | DRAWN BY | T. Chase | 10-Nov-06 |
| .XX | ±0.01 | CHECKED | | |
| .XXX | ±0.001 | APPROVED | | |
| ANGLES | ±0.5 | USED ON: Module Manifolds | | |

**NOvA Experiment (Fermilab E929)**

University of Minnesota

**Optical Connector**

| Model Type: | Model File Name: | Drawing File Name: |
|---|---|---|
| PART | OPT_CONN_7 | OPT_CONN_7 |
| Scale: 3.000:1 | Drawing Number | Revision / Sheet: 1 of 3 |

Finish

All dimensions are in mm unless specified otherwise