REV	DESCRIPTION	DATE

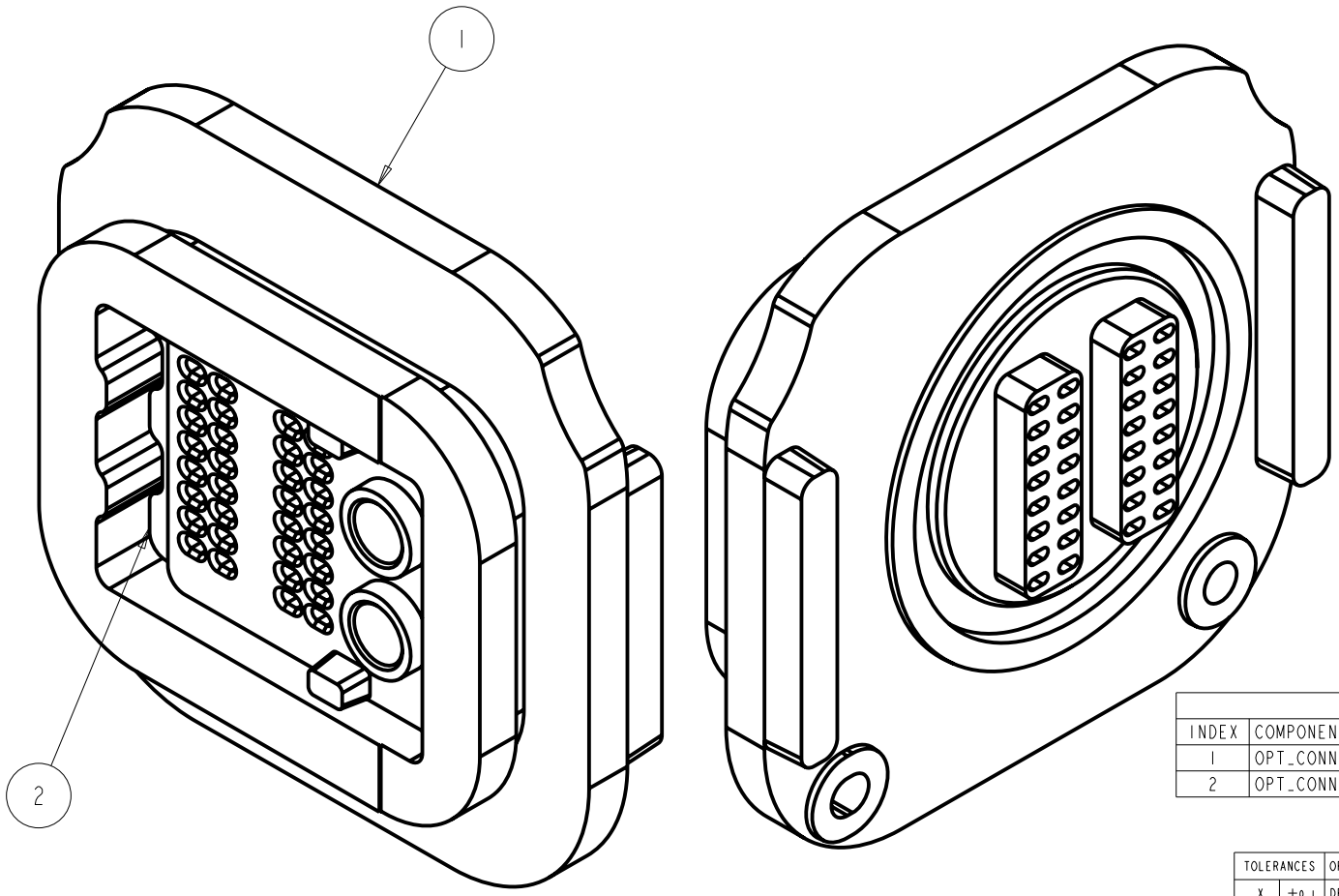

BILL OF MATERIALS

INDEX	COMPONENT NAME	TYPE	QTY	NOTES
1	OPT_CONN_7	PART	1	
2	OPT_CONN_BACK_7	PART	1	

TOLERANCES		ORIGINATOR	T. Chase	14-Nov-06
.X	±0.1	DRAWN BY	T. Chase	14-Nov-06
.XX	±0.01	CHECKED		
.XXX	±0.001	APPROVED		
Angles	±0.5	USED ON: Manifold Module		

NOvA Experiment (Fermilab E929)

UNIVERSITY OF MINNESOTA

Optical Connector Assembly

Finish	Model Type: ASSEM	Model File Name: OPT_CONN_7_ASM	Drawing File Name: OPT_CONN_7_ASM	
	Scale 4.000:1	Drawing Number	Revision	Sheet 1 of 1
	All dimensions are in mm unless specified otherwise			

NOTES

1	ULTRASONICALLY WELD BACK INTO POCKET OF OPTICAL CONNECTOR
2	QUANTITY: 12,500 (14 KT DETECTOR)