REV	DESCRIPTION	DATE

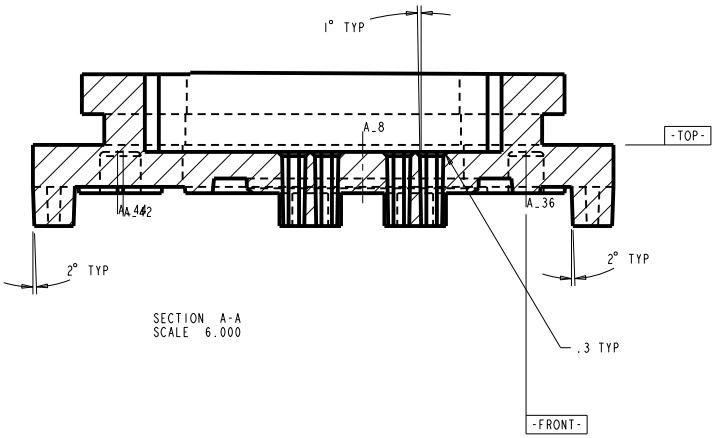

SECTION A-A
SCALE 6.000

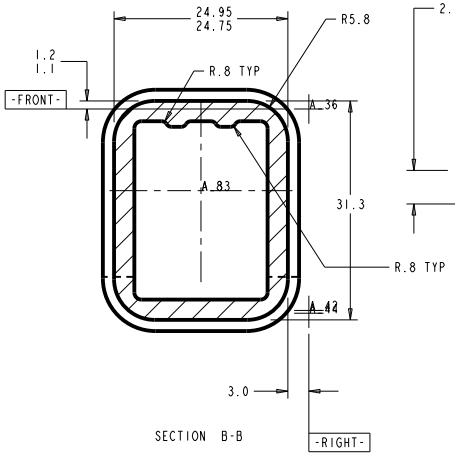

SECTION B-B

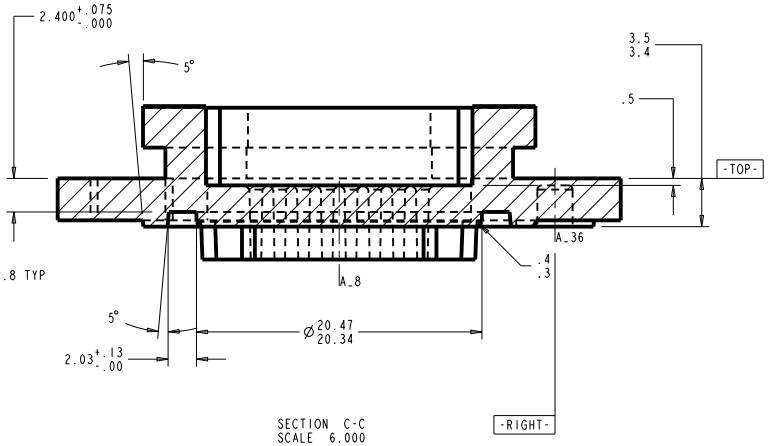

SECTION C-C
SCALE 6.000

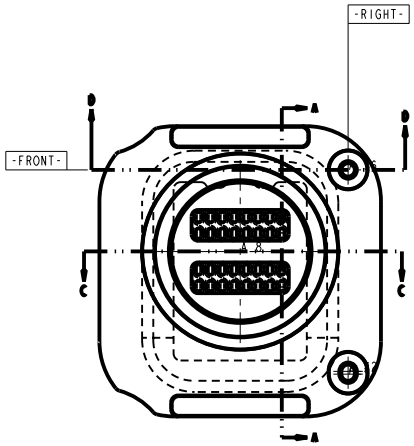

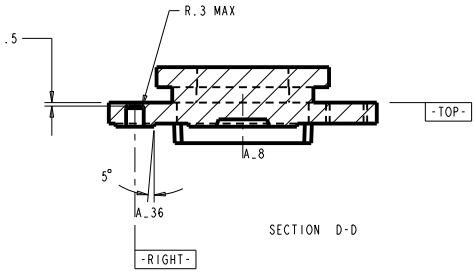

SECTION D-D

TOLERANCES		ORIGINATOR	T. Chase	10-Nov-06
.X	±0.1	DRAWN BY	T. Chase	10-Nov-06
.XX	±0.01	CHECKED		
.XXX	±0.001	APPROVED		
ANGLES	±0.5	USED ON: Module Manifold		

NOvA Experiment (Fermilab E929)

University of Minnesota

Optical Connector

Finish	Model Type: PART	Model File Name: OPT_CONN_7	Drawing File Name: OPT_CONN_7
	Scale 3.000:1	Drawing Number	Revision / Sheet 2 of 3
	All dimensions are in mm unless specified otherwise		