REV	DESCRIPTION	DATE

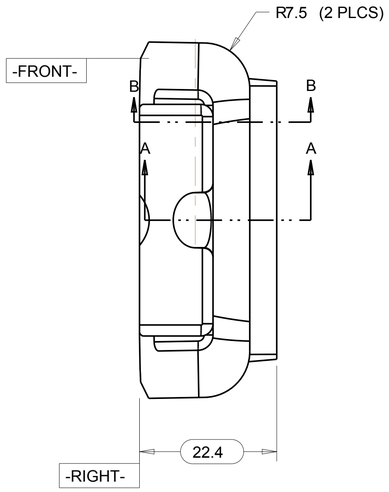

(HIDDEN LINES SUPPRESSED)

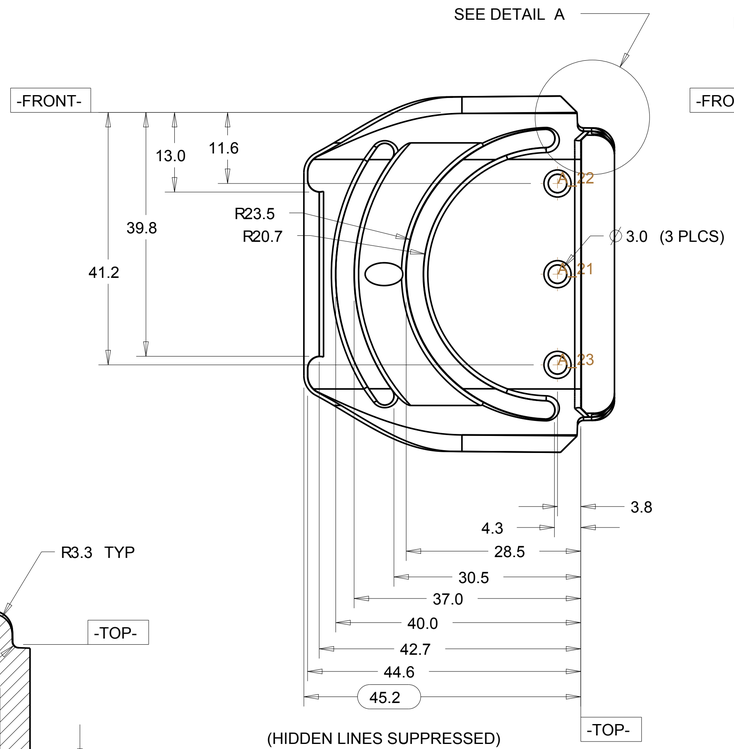

(HIDDEN LINES SUPPRESSED)

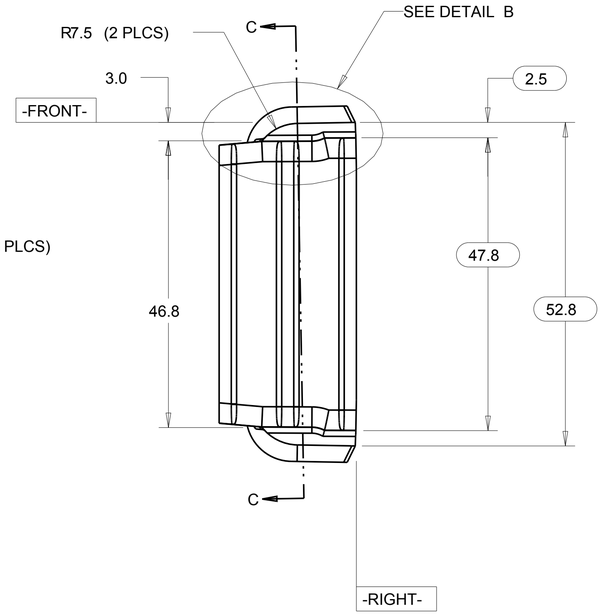

(HIDDEN LINES SUPPRESSED)

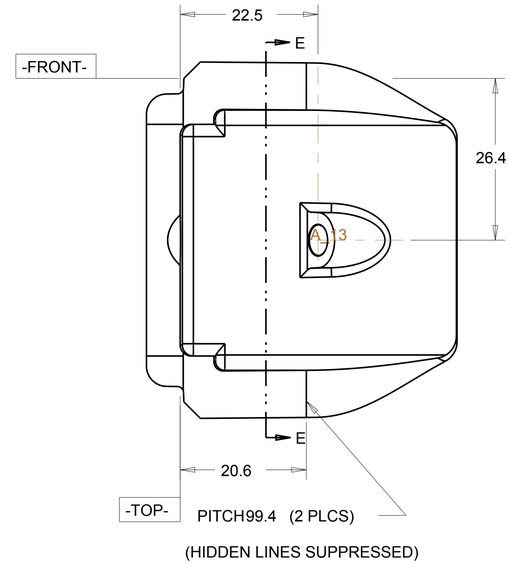

(HIDDEN LINES SUPPRESSED)

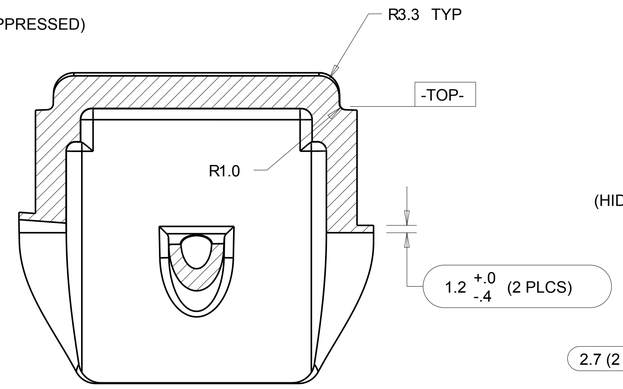

SECTION C-C
(HIDDEN LINES SUPPRESSED)

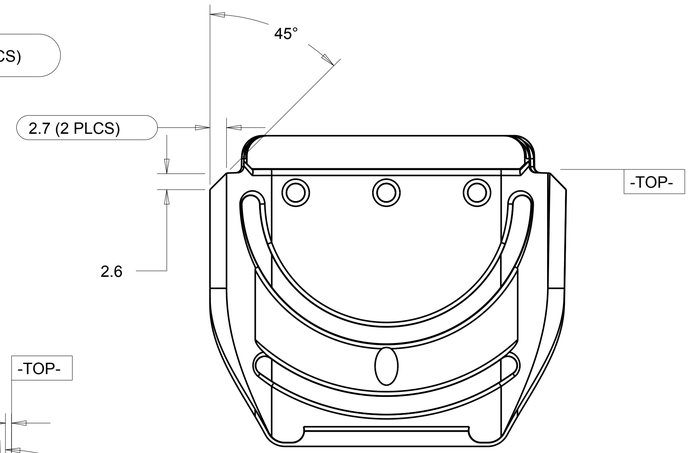

(HIDDEN LINES SUPPRESSED)

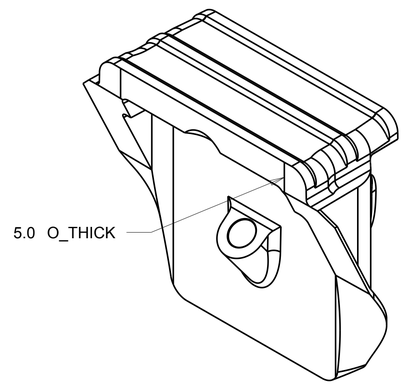

(HIDDEN LINES SUPPRESSED)

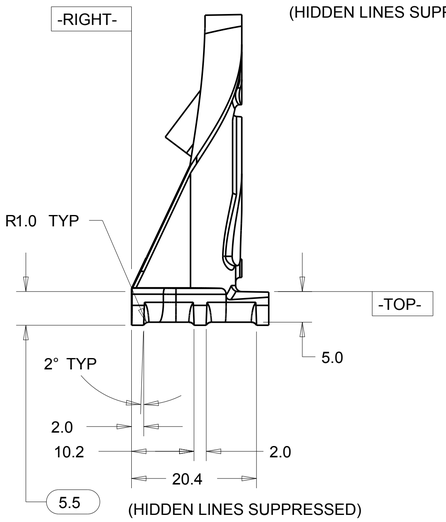

(HIDDEN LINES SUPPRESSED)

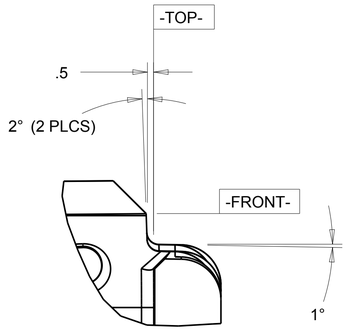

DETAIL A
SCALE 4.000
(HIDDEN LINES SUPPRESSED)

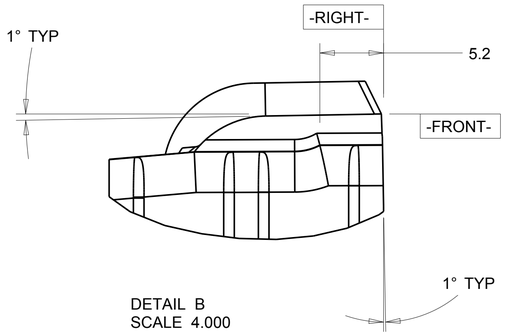

DETAIL B
SCALE 4.000
(HIDDEN LINES SUPPRESSED)

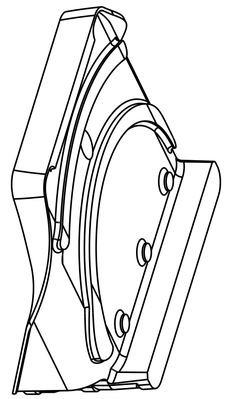

(HIDDEN LINES SUPPRESSED)

NOTES	
1	MATERIAL: TYPE I RIGID PVC, GEON M3800, BLACK
2	DO NOT USE MOLD RELEASE
3	MATERIAL REGRIND NOT TO EXCEED SUPPLIER RECOMMENDATIONS
4	PART VOLUME: 18.2 CC (1.11 IN^3)
5	QUANTITY: 25,000 (14 KT DETECTOR)

TOLERANCES		ORIGINATOR	T. Chase	06-Jul-07
.X	± 0.1	DRAWN BY	T. Chase	06-Jul-07
.XX	± 0.01	CHECKED		
.XXX	± 0.001	APPROVED		
ANGLES	± 0.5	USED ON: NOvA far detector module manifolds		

NOvA Experiment (Fermilab E929)

University of Minnesota

End Plate Side Seal, Vertical

Model Type:	Model File Name:	Drawing File Name:
PART	FD_END_PLATE_SIDE_SEAL_VERT	FD_END_PLATE_SIDE_SEAL_VERT
Scale	Drawing Number	Revision / Sheet
2.000 :1		1 of 2

Finish

All dimensions are in mm unless specified otherwise

REV	DESCRIPTION	DATE

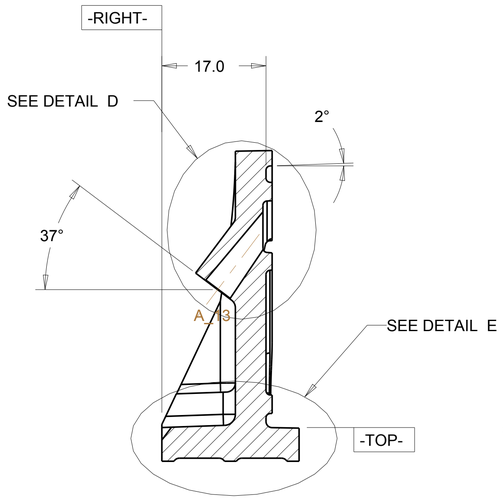

SECTION A-A
(HIDDEN LINES SUPPRESSED)

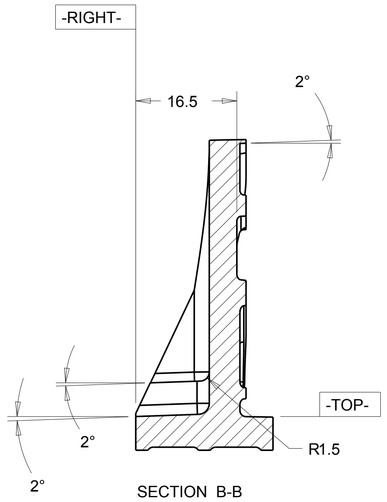

SECTION B-B
(HIDDEN LINES SUPPRESSED)

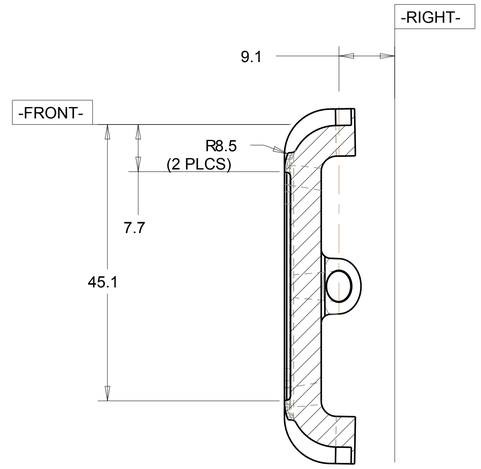

SECTION E-E
(HIDDEN LINES SUPPRESSED)

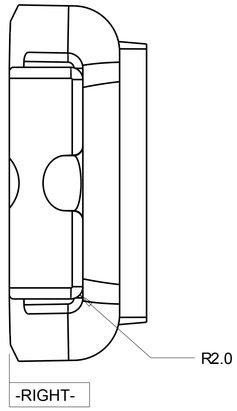

(HIDDEN LINES SUPPRESSED)

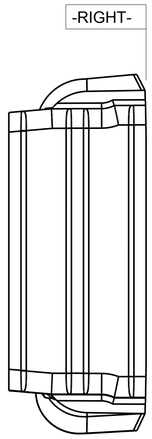

(HIDDEN LINES SUPPRESSED)

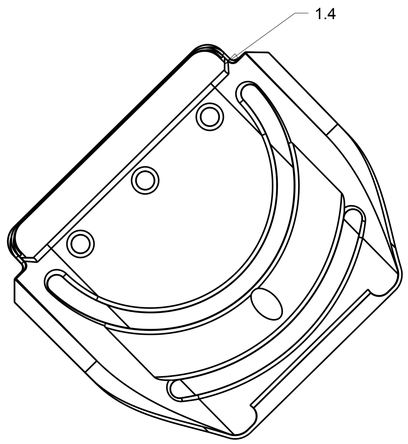

(HIDDEN LINES SUPPRESSED)

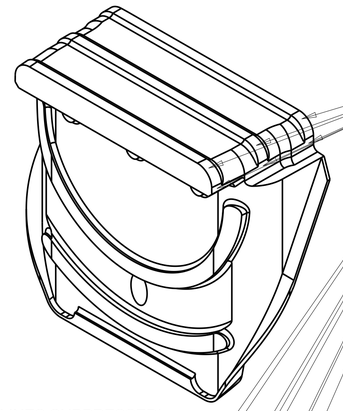

(HIDDEN LINES SUPPRESSED)

(HIDDEN LINES SUPPRESSED)

DO NOT INCLUDE PARTING LINES, EJECTOR PINS, GATES, SPRUES NOR RUNNERS ON THESE SURFACES

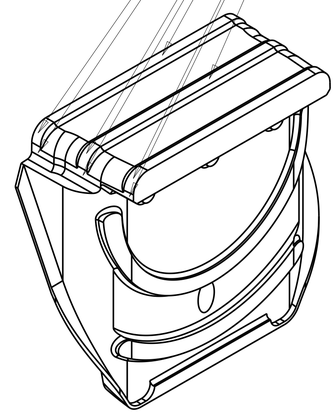

(HIDDEN LINES SUPPRESSED)

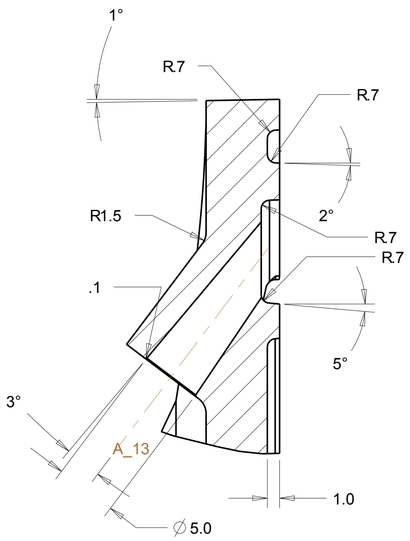

DETAIL D
SCALE 4.000
(HIDDEN LINES SUPPRESSED)

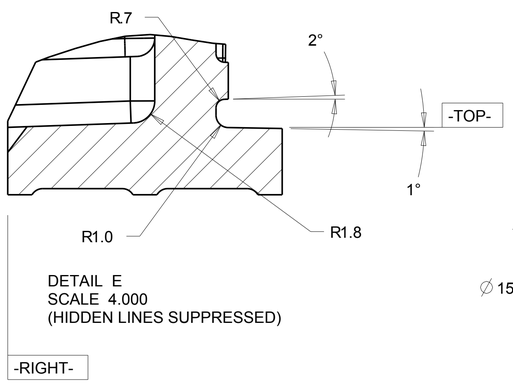

DETAIL E
SCALE 4.000
(HIDDEN LINES SUPPRESSED)

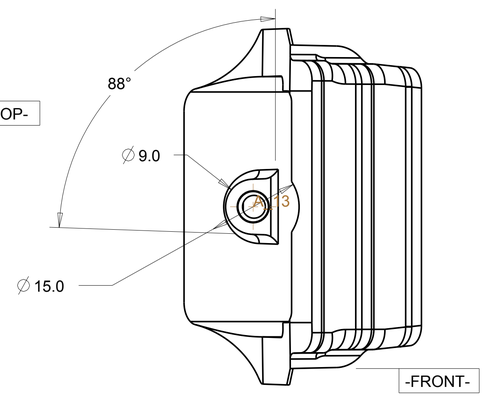

(HIDDEN LINES SUPPRESSED)

TOLERANCES		ORIGINATOR	T. Chase	09-Jul-07
.X	± 0.1	DRAWN BY	T. Chase	09-Jul-07
.XX	± 0.01	CHECKED		
.XXX	± 0.001	APPROVED		
ANGLES	± 0.5	USED ON: NOvA far detector module manifolds		

NOvA Experiment (Fermilab E929)

University of Minnesota

End Plate Side Seal, Vertical

Finish	Model Type: PART	Model File Name: FD_END_PLATE_SIDE_SEAL_VERT		Drawing File Name: FD_END_PLATE_SIDE_SEAL_VERT
	Scale 2.000 :1	Drawing Number	Revision	Sheet 2 of 2
	All dimensions are in mm unless specified otherwise			