REV	DESCRIPTION	DATE

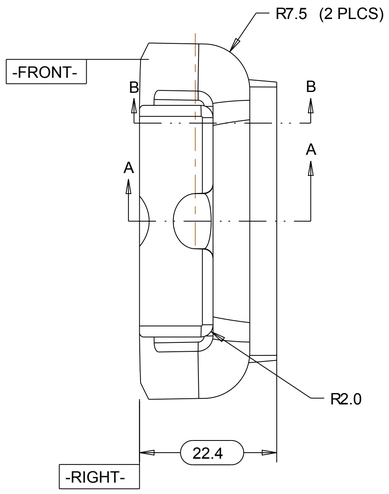

(HIDDEN LINES SUPPRESSED)

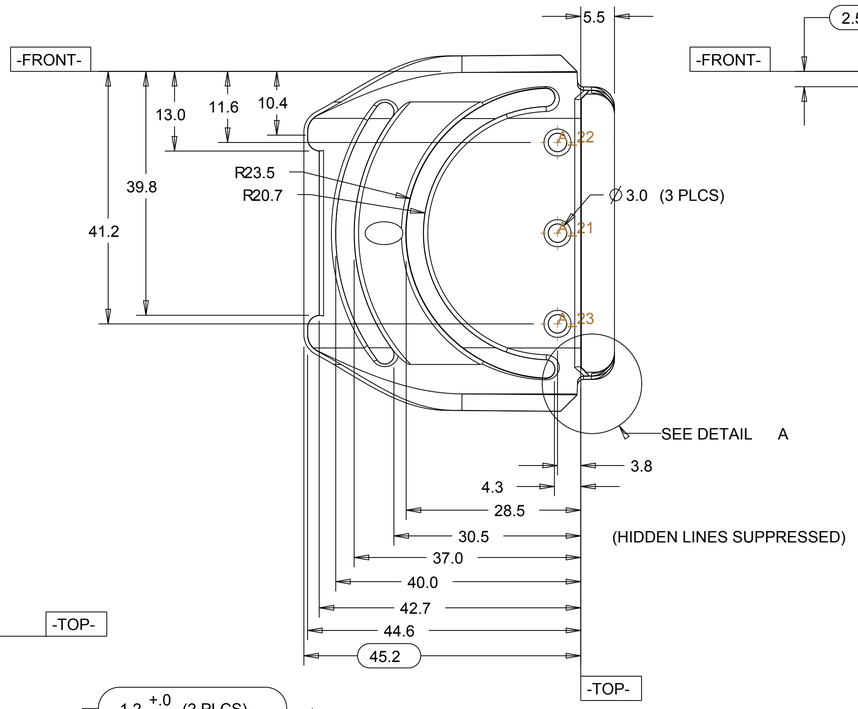

(HIDDEN LINES SUPPRESSED)

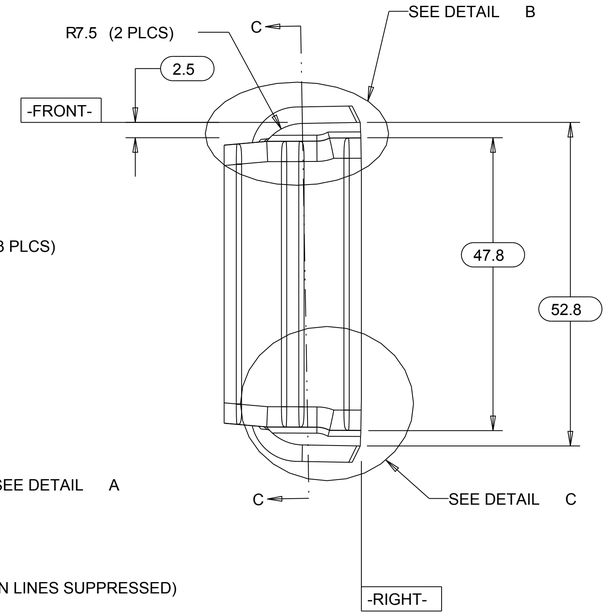

(HIDDEN LINES SUPPRESSED)

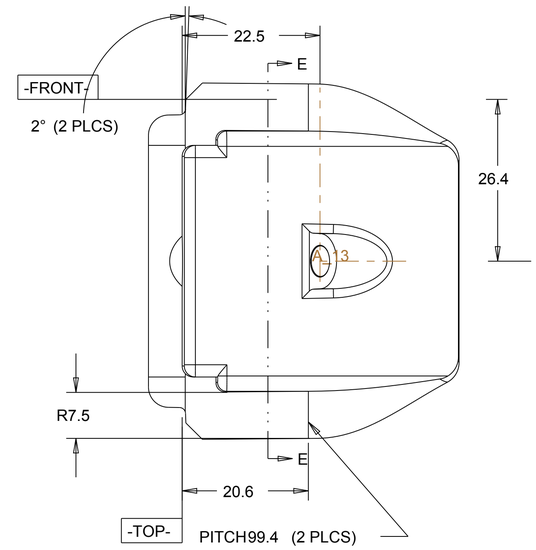

(HIDDEN LINES SUPPRESSED)

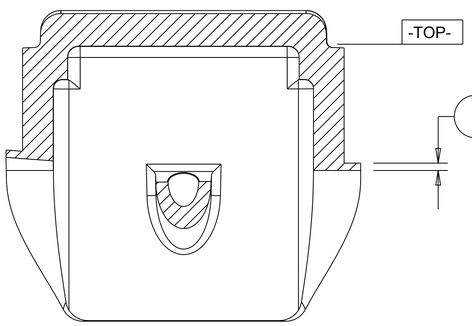

SECTION C-C

(HIDDEN LINES SUPPRESSED)

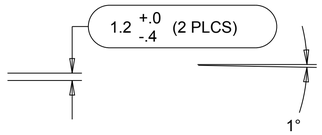

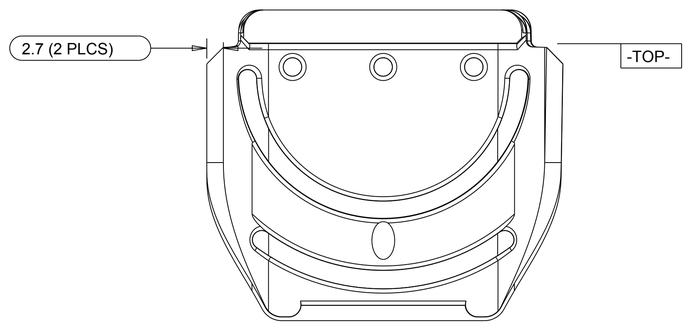

(HIDDEN LINES SUPPRESSED)

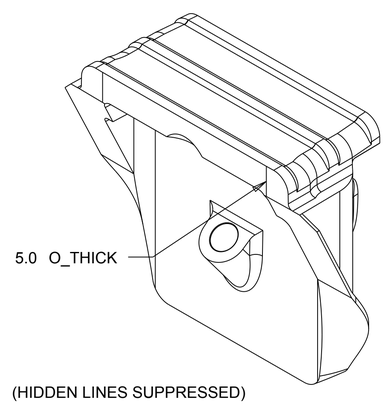

(HIDDEN LINES SUPPRESSED)

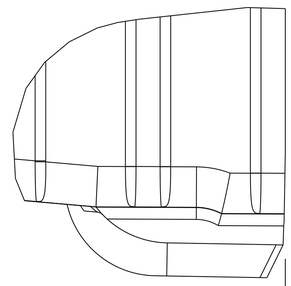

DETAIL C
SCALE 4.000
-RIGHT-

(HIDDEN LINES SUPPRESSED)

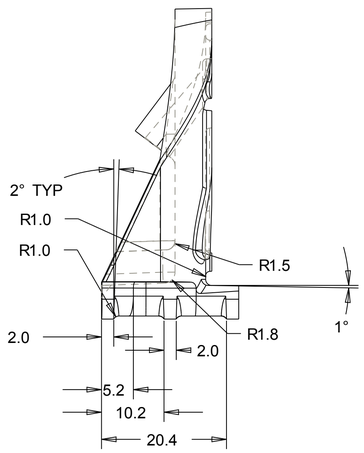

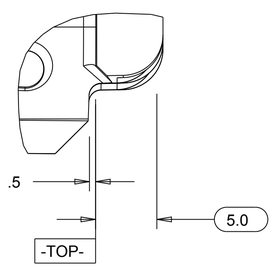

DETAIL A
SCALE 4.000

(HIDDEN LINES SUPPRESSED)

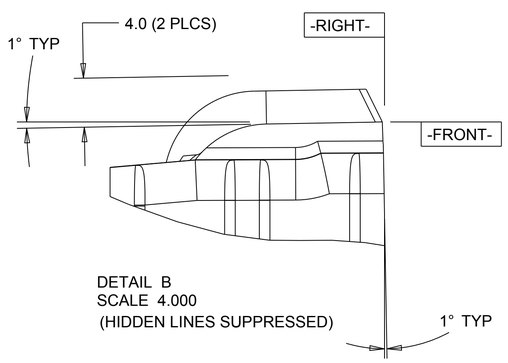

DETAIL B
SCALE 4.000
(HIDDEN LINES SUPPRESSED)

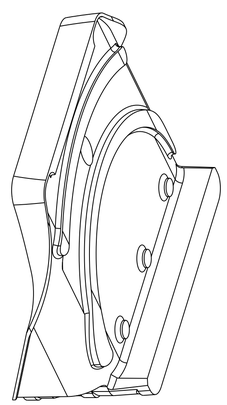

(HIDDEN LINES SUPPRESSED)

NOTES	
1	MATERIAL: TYPE I RIGID PVC, GEON M3800, BLACK
2	DO NOT USE MOLD RELEASE
3	MATERIAL REGRIND NOT TO EXCEED SUPPLIER RECOMMENDATIONS
4	PART VOLUME: 18.2 CC (1.11 IN^3)
5	QUANTITY: 12,500 (14 KT DETECTOR)

TOLERANCES		ORIGINATOR	T. Chase	06-Jul-07
.X	±0.1	DRAWN BY	T. Chase	06-Jul-07
.XX	±0.01	CHECKED		
.XXX	±0.001	APPROVED		
ANGLES	±0.5	USED ON: NOvA far detector module manifolds		

NOvA Experiment (Fermilab E929)

University of Minnesota

End Plate Side Seal, Vertical

	Model Type:	Model File Name:	Drawing File Name:	
	PART	FD_END_PLATE_SIDE_SEAL_VERT	FD_END_PLATE_SIDE_SEAL_VERT	
	Scale	Drawing Number	Revision	Sheet
	2.000:1			1 of 2
Finish	All dimensions are in mm unless specified otherwise			

REV	DESCRIPTION	DATE

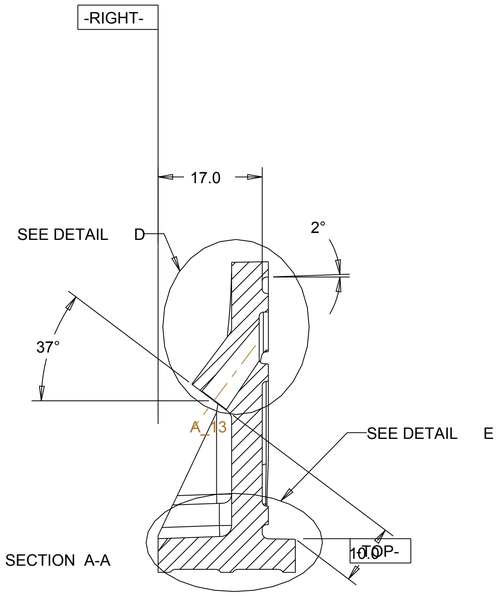

SECTION A-A

(HIDDEN LINES SUPPRESSED)

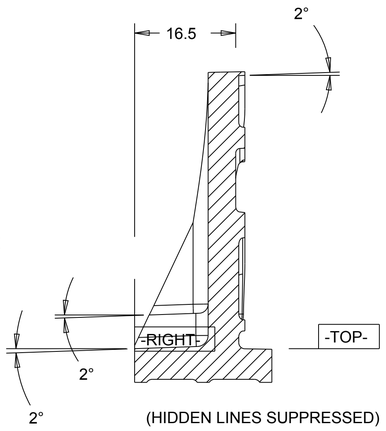

(HIDDEN LINES SUPPRESSED)

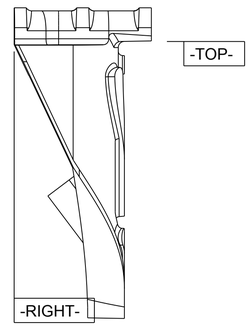

(HIDDEN LINES SUPPRESSED)

SECTION B-B

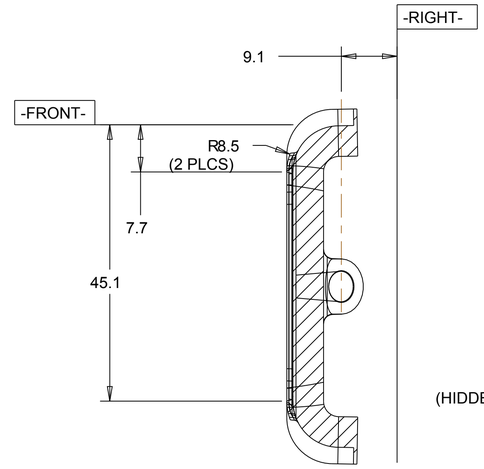

SECTION E-E

(HIDDEN LINES SUPPRESSED)

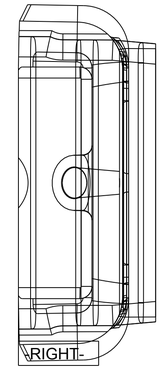

(HIDDEN LINES SUPPRESSED)

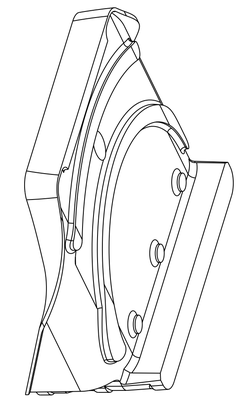

(HIDDEN LINES SUPPRESSED)

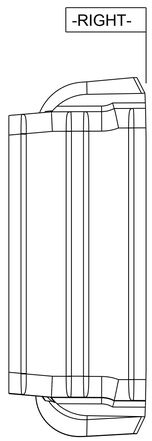

(HIDDEN LINES SUPPRESSED)

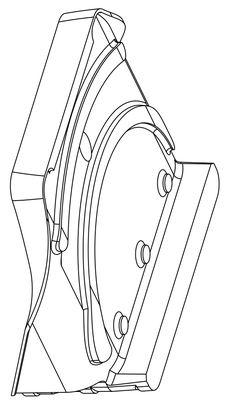

(HIDDEN LINES SUPPRESSED)

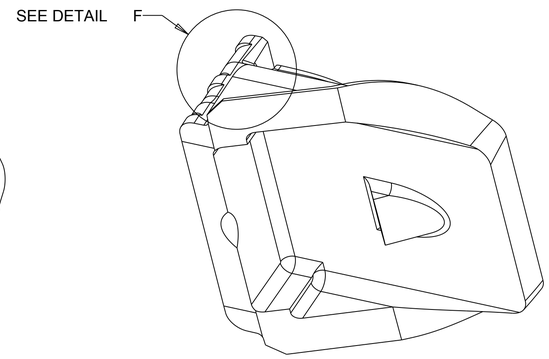

(HIDDEN LINES SUPPRESSED)

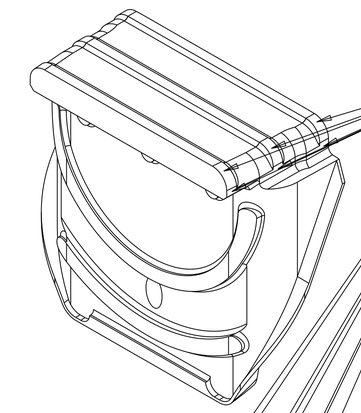

(HIDDEN LINES SUPPRESSED)

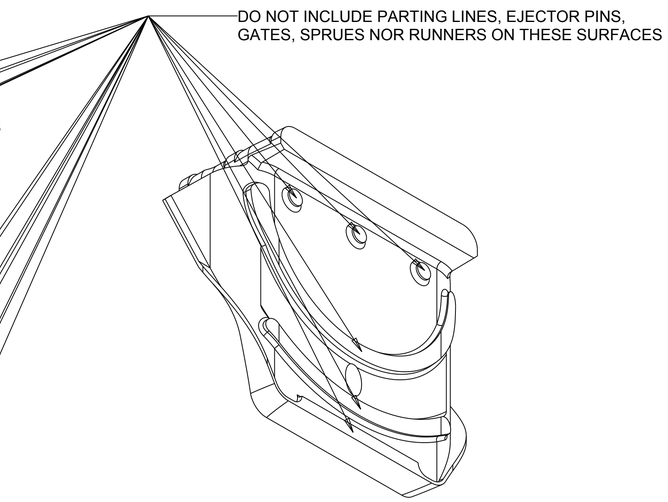

(HIDDEN LINES SUPPRESSED)

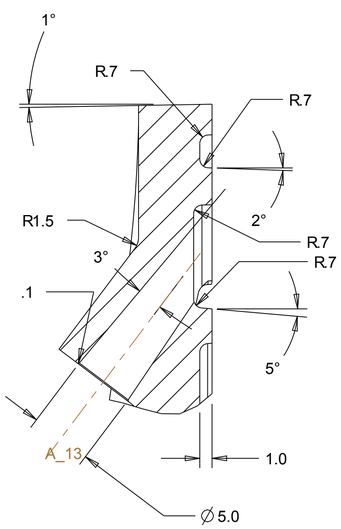

DETAIL D
SCALE 4.000
(HIDDEN LINES SUPPRESSED)

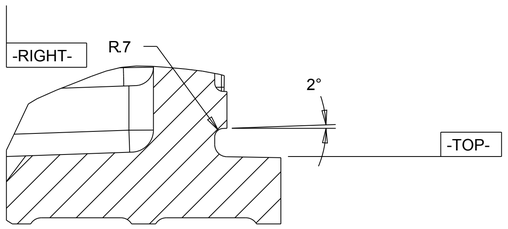

DETAIL E
SCALE 4.000
(HIDDEN LINES SUPPRESSED)

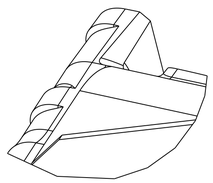

DETAIL F
SCALE 4.000
(HIDDEN LINES SUPPRESSED)

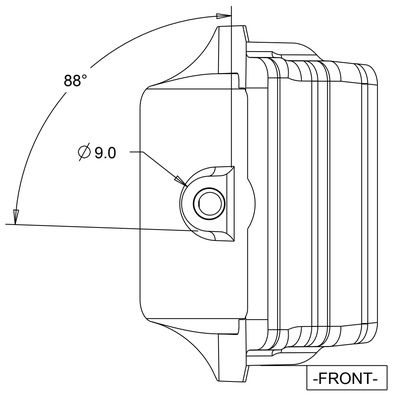

TOLERANCES		ORIGINATOR	T. Chase	09-Jul-07
.X	±0.1	DRAWN BY	T. Chase	09-Jul-07
.XX	±0.01	CHECKED		
.XXX	±0.001	APPROVED		
ANGLES	±0.5	USED ON: NOvA far detector module manifolds		

NOvA Experiment (Fermilab E929)

University of Minnesota

End Plate Side Seal, Vertical

Model Type:	Model File Name:	Drawing File Name:	
PART	FD_END_PLATE_SIDE_SEAL_VERT	FD_END_PLATE_SIDE_SEAL_VERT	
Scale	Drawing Number	Revision	Sheet
2.000:1			2 of 2
Finish	All dimensions are in mm unless specified otherwise		